Sunlight Readable Panel PC

cincoze

CS-100/P2102 Series

User Manual

Industrial Panel PC

High Performance Sunlight Readable Panel PC

Version: V1.16

Contents

Preface 5
Revision 5
Copyright Notice 5
Acknowledgement 5
Disclaimer 5
Declaration of Conformity 6
Product Warranty Statement 6
Technical Support and Assistance 7
Conventions Used in this Manual 8
Safety Precautions 8
Package Contents 9
Ordering Information 10
Chapter 1 Product Introductions 12
1.1 Overview 13
1.2 Highlights 13
1.3 Key Features 14
1.4 Hardware Specification 15
1.4.1 CS-112HC/P2102 Series 15
1.4.2 CS-115C/P2102 Series 20
1.4.3 CS-W115FHC/P2102 Series 25
1.4.4 CS-117C/P2102 Series 30
1.4.5 CS-119C/P2102 Series 35
1.4.6 CS-W121C/P2102 Series 40
1.4.7 CS-W124C/P2102 Series 45
1.5 System I/O 50
1.5.1 Front 50
1.5.2 Rear 51

1.5.3 Left 51
1.5.4 Right 52
1.5.5 Top 52
Chapter 2 Switches & Connectors 53
2.1 Location of Switches and Connectors 54
2.1.1 Top View 54
2.1.2 Bottom View 54
2.2 Switches and Connectors Definition 55
2.3 Definition of Switches 56
2.4 Definition of Connectors 58
Chapter 3 System Setup 63
3.1 Removing Top Cover 64
3.2 Installing Half Size Mini PCIe Card 65
3.3 Installing Full Size Mini PCIe Card 66
3.4 Installing M.2 E Key Card 67
3.5 Installing Antenna(s) 68
3.6 Installing SO-DIMM Memory 70
3.7 Installing PCI(e) Card 71
3.8 Installing Thermal Pad of Thermal Block 75
3.9 Installing Top Cover 75
3.10 Installing SATA Hard Drive at Front Panel 76
3.11 Installing SATA hard drive on Bottom Side 79
3.12 Installing SIM Card 82
3.13 Connecting with CS Display Module 83
3.14 Installing Panel Mount 86
Chapter 4 BIOS Setup 89
4.1 BIOS Introduction 90
4.2 Main Setup 90
4.3 Advanced Setup 92

4.3.1 CPU Configuration 92
4.3.2 PCH-FW Configuration 93
4.3.3 Trusted Computing 93
4.3.4 ACPI Settings 94
4.3.5 F81866 Super IO Configuration 95
4.3.6 Hardware Monitor 96
4.3.7 S5 RTC Wake Settings 96
4.3.8 Serial Port Console Redirection 97
4.3.9 USB Configuration 97
4.3.10 CSM Configuration 98
4.3.11 NVMe Configuration 99
4.3.12 Network Stack Configuration 99
4.4 Chipset Setup 100
4.4.1 System Agent (SA) Configuration 100
4.4.2 PCH-IO Configuration 101
4.5 Security Setup 105
4.6 Boot Setup 106
4.7 Save & Exit 107
Chapter 5 Product Application 108
5.1 Digital I/O (DIO) application 109
5.1.1 Digital I/O Programming Guide 109
5.2 P2102 Digital I/O (DIO) Hardware Specification 116
5.2.1 P2102 DIO Connector Definition 117
Chapter 6 Optional Modules & Accessories 119
6.1 Pin Definition and Settings of IGN Module 120
6.2 Installing CFM-IGN Module 121
6.3 Installing CFM-PoE Module 122
6.4 Installing VESA Mount 124
6.5 Installing Rack Mount 125

Preface

Revision

Revision	Description	Date
1.00	First Release	2020/01/13
1.01	Correction Made	2020/04/09
1.02	Correction Made	2020/10/05
1.03	Correction Made	2020/11/02
1.04	Correction Made	2020/11/13
1.05	Add DC_IN1 Warning	2021/04/20
1.06	Correction Made	2021/06/28
1.07	Add CS-W115FHC Display Module	2021/11/25
1.08	Add CS-W121C Display Module	2021/12/28
1.09	Add CS-W124C Display Module	2022/02/25
1.10	Separate Display module & PC module Remove CS-W115FHC Display Module	2022/10/21
1.11	Correction Made	2023/04/14
1.12	Correction Made	2024/02/07
1.13	Correction Made	2024/04/19
1.14	Power Spec Updated	2024/12/31
1.15	Add CS-W115FHC Display Module	2025/03/20
1.16	Correction Made	2025/11/11

Copyright Notice

© 2020 by Cincoze Co., Ltd. All rights are reserved. No parts of this manual may be copied, modified, or reproduced in any form or by any means for commercial use without the prior written permission of Cincoze Co., Ltd. All information and specification provided in this manual are for reference only and remain subject to change without prior notice.

Acknowledgement

Cincoze is a registered trademark of Cincoze Co., Ltd. All registered trademarks and product names mentioned herein are used for identification purposes only and may be trademarks and/or registered trademarks of their respective owners.

Disclaimer

This manual is intended to be used as a practical and informative guide only and is subject to change without notice. It does not represent a commitment on the part of Cincoze. This product

might include unintentional technical or typographical errors. Changes are periodically made to the information herein to correct such errors, and these changes are incorporated into new editions of the publication.

Declaration of Conformity

FCC

This equipment has been tested and found to comply with the limits for a Class A digital device, pursuant to Part 15 of the FCC Rules. These limits are designed to provide reasonable protection against harmful interference when the equipment is operated in a commercial environment. This equipment generates, uses, and can radiate radio frequency energy and, if not installed and used in accordance with the instruction manual, may cause harmful interference to radio communications. Operation of this equipment in a residential area is likely to cause harmful interference in which case the user will be required to correct the interference at his own expense.

CE

The product(s) described in this manual complies with all application European Union (CE) directives if it has a CE marking. For computer systems to remain CE compliant, only CE-compliant parts may be used. Maintaining CE compliance also requires proper cable and cabling techniques.

Product Warranty Statement

Warranty

Cincoze products are warranted by Cincoze Co., Ltd. to be free from defect in materials and workmanship for 2 years from the date of purchase by the original purchaser. During the warranty period, we shall, at our option, either repair or replace any product that proves to be defective under normal operation. Defects, malfunctions, or failures of the warranted product caused by damage resulting from natural disasters (such as by lightening, flood, earthquake, etc.), environmental and atmospheric disturbances, other external forces such as power line disturbances, plugging the board in under power, or incorrect cabling, and damage caused by misuse, abuse, and unauthorized alteration or repair, and the product in question is either software, or an expendable item (such as a fuse, battery, etc.), are not warranted.

RMA

Before sending your product in, you will need to fill in Cincoze RMA Request Form and obtain an RMA number from us. Our staff is available at any time to provide you with the most friendly and

immediate service.

- **RMA Instruction**
  - Customers must fill in Cincoze Return Merchandise Authorization (RMA) Request Form and obtain an RMA number prior to returning a defective product to Cincoze for service.
  - Customers must collect all the information about the problems encountered and note anything abnormal and describe the problems on the “Cincoze Service Form” for the RMA number apply process.
  - Charges may be incurred for certain repairs. Cincoze will charge for repairs to products whose warranty period has expired. Cincoze will also charge for repairs to products if the damage resulted from acts of God, environmental or atmospheric disturbances, or other external forces through misuse, abuse, or unauthorized alteration or repair. If charges will be incurred for a repair, Cincoze lists all charges, and will wait for customer’s approval before performing the repair.
  - Customers agree to ensure the product or assume the risk of loss or damage during transit, to prepay shipping charges, and to use the original shipping container or equivalent.
  - Customers can be sent back the faulty products with or without accessories (manuals, cable, etc.) and any components from the system. If the components were suspected as part of the problems, please note clearly which components are included. Otherwise, Cincoze is not responsible for the devices/parts.
  - Repaired items will be shipped along with a "Repair Report" detailing the findings and actions taken.

Limitation of Liability

Cincoze’ liability arising out of the manufacture, sale, or supplying of the product and its use, whether based on warranty, contract, negligence, product liability, or otherwise, shall not exceed the original selling price of the product. The remedies provided herein are the customer’s sole and exclusive remedies. In no event shall Cincoze be liable for direct, indirect, special or consequential damages whether based on contract of any other legal theory.

Technical Support and Assistance

1. Visit the Cincoze website at www.cincoze.com where you can find the latest information about the product.
2. Contact your distributor or our technical support team or sales representative for technical support if you need additional assistance. Please have following information ready before you call:
   - Product name and serial number

- Description of your peripheral attachments
- Description of your software (operating system, version, application software, etc.)
- A complete description of the problem
- The exact wording of any error messages

Conventions Used in this Manual

	WARNING (AVERTIR)	**This indication alerts operators to an operation that, if not strictly observed, may result in severe injury.** **(Cette indication avertit les opérateurs d'une opération qui, si elle n'est pas strictement observée, peut entraîner des blessures graves.)**
	CAUTION (ATTENTION)	**This indication alerts operators to an operation that, if not strictly observed, may result in safety hazards to personnel or damage to equipment.** **(Cette indication avertit les opérateurs d'une opération qui, si elle n'est pas strictement observée, peut entraîner des risques pour la sécurité du personnel ou des dommages à l'équipement.)**
	NOTE (NOTE)	**This indication provides additional information to complete a task easily.** **(Cette indication fournit des informations supplémentaires pour effectuer facilement une tâche.)**

Safety Precautions

Before installing and using this device, please note the following precautions.

1. Read these safety instructions carefully.
2. Keep this User's Manual for future reference.
3. Disconnected this equipment from any AC outlet before cleaning.
4. For plug-in equipment, the power outlet socket must be located near the equipment and must be easily accessible.
5. Keep this equipment away from humidity.
6. Put this equipment on a reliable surface during installation. Dropping it or letting it fall may cause damage.
7. Make sure the voltage of the power source is correct before connecting the equipment to the power outlet.
8. Use a power cord that has been approved for using with the product and that it matches the voltage and current marked on the product's electrical range label. The voltage and current rating of the cord must be greater than the voltage and current rating marked on the product.
9. Position the power cord so that people cannot step on it. Do not place anything over the

power cord.

10. All cautions and warnings on the equipment should be noted.
11. If the equipment is not used for a long time, disconnect it from the power source to avoid damage by transient overvoltage.
12. Never pour any liquid into an opening. This may cause fire or electrical shock.
13. Never open the equipment. For safety reasons, the equipment should be opened only by qualified service personnel.

    If one of the following situations arises, get the equipment checked by service personnel:

    - The power cord or plug is damaged.
    - Liquid has penetrated into the equipment.
    - The equipment has been exposed to moisture.
    - The equipment does not work well, or you cannot get it work according to the user's manual.
    - The equipment has been dropped and damaged.
    - The equipment has obvious signs of breakage.
14. CAUTION: Risk of Explosion if Battery is replaced by an Incorrect Type. Dispose of Used Batteries According to the Instructions.

    ATTENTION: Risque d'explosion si la batterie est remplacée par un type incorrect. Mettre au rebus les batteries usagées selon les instructions.
15. Equipment intended only for use in a RESTRICTED ACCESS AREA.
16. Ensure to connect the power cord of power adapter to a socket-outlet with earthing connection.
17. Dispose of used battery promptly. Keep away from children. Do not disassemble and do not dispose of in fire.

Package Contents

Before installation, please ensure all the items listed in the following table are included in the package.

Item	Description	Q'ty
1	Panel PC	1
2	Thermal Pad (for CPU Thermal Block)	1
3	Power Terminal Block Connector	1
4	Remote Power On/Off Terminal Block Connector	1
5	DIO Terminal Block Connector	2
6	Screws Pack	5
7	PCI / PCIe Card Installation Kit (For CS-100/P2102E Only)	1
8	Panel Mounting Kit (The quantity varies with the size of the display module, please refer to the datasheet for the actual quantity)	1

Note: Notify your sales representative if any of the above items are missing or damaged.

Ordering Information

Model No.	Product Description
CS-112HC/P2102-i5	12.1" 1500 nits TFT-LCD Sunlight Readable and Modular Panel PC with 8th Gen. Intel Core i5-8365UE Quad Core Processor and P-Cap. Touch
CS-112HC/P2102E-i5	12.1" 1500nits TFT-LCD Sunlight Readable, Modular and Expandable Panel PC with 8th Gen. Intel Core i5-8365UE Quad Core Processor and P-Cap. Touch
CS-112HC/P2102-i3	12.1" 1500nits TFT-LCD Sunlight Readable and Modular Panel PC with 8th Gen. Intel Core i3-8145UE Quad Core Processor and P-Cap. Touch
CS-112HC/P2102E-i3	12.1" 1500nits TFT-LCD Sunlight Readable, Modular and Expandable Panel PC with 8th Gen. Intel Core i3-8145UE Quad Core Processor and P-Cap. Touch
CS-115C/P2102-i5	15" 1800nits TFT-LCD Sunlight Readable and Modular Panel PC with 8th Gen. Intel Core i5-8365UE Quad Core Processor and P-Cap. Touch
CS-115C/P2102E-i5	15" 1800nits TFT-LCD Sunlight Readable, Modular and Expandable Panel PC with 8th Gen. Intel Core i5-8365UE Quad Core Processor and P-Cap. Touch
CS-115C/P2102-i3	15" 1800nits TFT-LCD Sunlight Readable and Modular Panel PC with 8th Gen. Intel Core i3-8145UE Quad Core Processor and P-Cap. Touch
CS-115C/P2102E-i3	15" 1800nits TFT-LCD Sunlight Readable, Modular and Expandable Panel PC with 8th Gen. Intel Core i3-8145UE Quad Core Processor and P-Cap. Touch
CS-W115FHC /P2102-i5	15.6" TFT-LCD 1200 nits Full HD Sunlight Readable Display Modular Panel PC with 8th Gen. Intel Core i5-8365UE Quad Core Processor and P-Cap. Touch
CS-W115FHC /P2102E-i5	15.6" TFT-LCD 1200 nits Full HD Sunlight Readable Display Modular and Expandable Panel PC with 8th Gen. Intel Core i5-8365UE Quad Core Processor and P-Cap. Touch
CS-W115FHC /P2102-i3	15.6" TFT-LCD 1200 nits Full HD Sunlight Readable Display Modular Panel PC with 8th Gen. Intel Core i3-8145UE Dual Core Processor and P-Cap. Touch
CS-W115FHC /P2102E-i3	15.6" TFT-LCD 1200 nits Full HD Sunlight Readable Display Modular and Expandable Panel PC with 8th Gen. Intel Core i3-8145UE Dual Core Processor and P-Cap. Touch
CS-117C/P2102-i5	17" 1500nits TFT-LCD Sunlight Readable and Modular Panel PC with 8th Gen. Intel Core i5-8365UE Quad Core Processor and P-Cap. Touch
CS-117C/P2102E-i5	17" 1500nits TFT-LCD Sunlight Readable, Modular and Expandable Panel PC with 8th Gen. Intel Core i5-8365UE Quad Core Processor and P-Cap. Touch
CS-117C/P2102-i3	17" 1500nits TFT-LCD Sunlight Readable and Modular Panel PC with 8th Gen. Intel Core i3-8145UE Quad Core Processor and P-Cap. Touch
CS-117C/P2102E-i3	17" 1500nits TFT-LCD Sunlight Readable, Modular and Expandable Panel PC with 8th Gen. Intel Core i3-8145UE Quad Core Processor and P-Cap. Touch
CS-119C/P2102-i5	19" 1600nits TFT-LCD Sunlight Readable and Modular Panel PC with 8th Gen. Intel Core i5-8365UE Quad Core Processor and P-Cap. Touch

CS-119C/P2102E-i5	19" 1600nits TFT-LCD Sunlight Readable, Modular and Expandable Panel PC with 8th Gen. Intel Core i5-8365UE Quad Core Processor and P-Cap. Touch
CS-119C/P2102-i3	19" 1600nits TFT-LCD Sunlight Readable and Modular Panel PC with 8th Gen. Intel Core i3-8145UE Quad Core Processor and P-Cap. Touch
CS-119C/P2102E-i3	19" 1600nits TFT-LCD Sunlight Readable, Modular and Expandable Panel PC with 8th Gen. Intel Core i3-8145UE Quad Core Processor and P-Cap. Touch
CS-W121C/P2102-i5	21.5" Full HD TFT-LCD Modular Panel PC with 8th Gen. Intel Core i5-8365UE Quad Core Processor and P-Cap. Touch
CS-W121C/P2102E-i5	21.5" Full HD TFT-LCD Modular and Expandable Panel PC with 8th Gen. Intel Core i5-8365UE Quad Core Processor and P-Cap. Touch
CS-W121C/P2102-i3	21.5" Full HD TFT-LCD Modular Panel PC with 8th Gen. Intel Core i3-8145UE Dual Core Processor and P-Cap. Touch
CS-W121C/P2102E-i3	21.5" Full HD TFT-LCD Modular and Expandable Panel PC with 8th Gen. Intel Core i3-8145UE Dual Core Processor and P-Cap. Touch
CS-W124C/P2102-i5	24" Full HD TFT-LCD Modular Panel PC with 8th Gen. Intel Core i5-8365UE Quad Core Processor and P-Cap. Touch
CS-W124C/P2102E-i5	24" Full HD TFT-LCD Modular and Expandable Panel PC with 8th Gen. Intel Core i5-8365UE Quad Core Processor and P-Cap. Touch
CS-W124C/P2102-i3	24" Full HD TFT-LCD Modular Panel PC with 8th Gen. Intel Core i3-8145UE Dual Core Processor and P-Cap. Touch
CS-W124C/P2102E-i3	24" Full HD TFT-LCD Modular and Expandable Panel PC with 8th Gen. Intel Core i3-8145UE Dual Core Processor and P-Cap. Touch

Chapter 1
Product Introductions

1.1 Overview

The CS-100/P2102 series is a TFT-LCD sunlight readable panel PC that offers sufficient screen brightness for better image quality in outdoor usage. The panel PC is powered by Intel® 8th generation Core™ U series processor that brings outstanding computing performance boost up to 84% at a TDP of 15 watts, compared to 6th generation Intel® Core™ U series. To enable faster responsiveness and deal with multi tasks with ease, the CS-100/P2102 series is equipped with two DDR4 2400 SODIMM sockets for up to 64 GB memory.

With its slim design, the CS-100/P2102 series offers extensive I/O to fulfill different connectivities and can easily fit into almost any space limited environment. For wireless connectivity, the CS-100/P2102 series has 1x M.2 2230 E key and 2x full-size Mini-PCIe expansions which can be installed various add-on cards to enable Wi-Fi, 3G, and LTE communication. For expansion requirements, the CS-100/P2102E series has 1x PCI/PCIe x4, 1x M.2 2230 E key and 2x full-size Mini-PCIe expansions which can be installed various add-on cards to increase desired functions. Besides, the CS-100/P2102 series supports Control Function Module (CFM) Technology to install optional CFM modules for increasing power over ethernet and power ignition sensing functions according to user's specific applications. Featuring rigorous industrial protections, wide range operating temperature, IP65 dust/waterproof front panel, and wide range DC power input (9 to 48VDC), the CS-100/P2102 series is appropriate for tough outdoor applications under direct sunlight.

Furthermore, the CS-100/P2102 series supports Cincoze patented Convertible Display System (CDS) technology, allowing users to replace display module or computer module on-site easily and thereby reducing maintenance costs and downtime.

1.2 Highlights

High Performance Per Watt

Powered by 8th generation Intel® Core ™ U series processor (up to 4 cores, 4.10 GHz) at a TDP of only 15W, the CS-100/P2102 series can fulfill a variety of applications that require high-performance computing and low power budget simultaneously.

Sunlight Readable

Featuring ultra-high brightness, and high resolution, the CS-100/P2102 series provides excellent viewing experience under all lighting conditions including direct sunlight.

Built for Extreme Temperature

Built with wide operating temperature ranges and a special selection of industrial-grade components, the CS-100/P2102 series is suitable for deploying under extreme environments and severe climate.

1.3 Key Features

- 12.1”~24” TFT-LCD with Ultra-high Brightness and high resolution
- Onboard 8th Generation Intel® Core™ U Series Processor
- 2x DDR4 SO-DIMM Socket, Supports Up to 2400MHz, 64GB
- Supports Triple Independent Display
- Integrated USB 3.2 Gen 2 supports up to 10Gbps
- M.2 E Key Socket for Wireless Module or Intel CRF Module
- Supports Ignition Sensing Function (IGN) (with optional CFM module)
- Supports 2x PoE+ Function (with optional CFM module)
- 1x PCI or 1x PCIe Slot for Add-on Card Expansion: Max. Length 180mm including Bracket (with optional riser card) (For CS-100/P2102E series only)
- Wide Range Operating Temperature
- Designed with Rugged Aluminum Die-casting Front Bezel
- True Flat IP65 Compliant Front Panel Protection
- Supports Panel / VESA / Rack Mounting

1.4 Hardware Specification

1.4.1 CS-112HC/P2102 Series

Model Name	CS-112HC
Display	
LCD Size	• 12.1" (4:3)
Max. Resolution	• 1024 x 768
Brightness (cd/m2)	• 1500
Contrast Ratio	• 700 : 1
LCD Color	• 16.7M
Pixel Pitch (mm)	• 0.24 (H) x 0.24 (V)
Viewing Angle	• 160 / 140
Backlight MTBF	• 50,000 hrs (LED Backlight)
Touchscreen	
Touchscreen Type	• Projected Capacitive
Wet Touch Tracking	✓
Physical	
Dimension (WxDxH)	• 345 x 265.3 x 57 mm
Weight	• 3.16 kg
Construction	• Flat Rugged Aluminum Die-casting Bezel
Power	
Power Consumption	• 16.22W (Typ.)
Environment	
Front Panel Protection	• IP 65 Compliant
Operating Temperature	• -20°C to 70°C (-4°F to 158°F) (With Industrial Grade Peripherals; Ambient with air flow)
Storage Temperature	• -30°C to 80°C (-22°F to 176°F)
Relative Humidity	• 90% RH @ 40°C (non-condensing)
EMC	• CE, UKCA, FCC, ICES-003 Class A
EMI	• CISPR 32 Conducted & Radiated: Class A • EN/BS EN 55032 Conducted & Radiated: Class A • EN/BS EN IEC 61000-3-2 Harmonic current emissions: Class A • EN/BS EN61000-3-3 Voltage fluctuations & flicker • FCC 47 CFR Part 15B, ICES-003 Conducted & Radiated: Class A
EMS	• EN/IEC 61000-4-2 ESD: Contact: 4 kV; Air: 8 kV • EN/IEC 61000-4-3 RS: 80 MHz to 1000 MHz: 3 V/m • EN/IEC 61000-4-4 EFT: AC Power: 1 kV; DC Power: 0.5 kV; Signal: 0.5 kV • EN/IEC 61000-4-5 Surges: AC Power: 2 kV; Signal: 1 kV

	• EN/IEC 61000-4-6 CS: 3V • EN/IEC 61000-4-8 PFMF: 50 Hz, 1A/m • EN/IEC 61000-4-11 Voltage Dips & Voltage Interruptions: 0.5 cycles at 50 Hz
Safety	• UL, cUL, CB, IEC, EN 62368-1

Model Name	P2102	P2102E
System		
Processor	• Onboard 8th Intel® Core™ U Processors (Whiskey Lake) - Intel® Core™ i5-8365UE Quad Core Processor (6M Cache, up to 4.10 GHz) - Intel® Core™ i3-8145UE Dual Core Processor (4M Cache, up to 3.90 GHz) - TDP: 15 W	
Memory	• 2x DDR4 2400 MHz 260-Pin SO-DIMM Socket • Support Un-buffered and Non-ECC Type up to 64 GB	
Graphics		
Graphics Engine	• Integrated Intel® UHD Graphics 620	
Maximum Display Output	• Supports Triple Independent Display (1x CDS, 1x VGA, 1x DisplayPort)	
VGA	• 1x VGA Connector (1920 x 1200 @60Hz)	
DP	• 1x DisplayPort Connector (4096 x 2304 @ 60Hz)	
Audio		
Audio Codec	• Realtek® ALC888, High Definition Audio	
Speaker-out	• 1x Speaker-out, Phone Jack 3.5mm	
Mic-in	• 1x Mic-in, Phone Jack 3.5mm	
I/O		
LAN	• 2x GbE LAN (Supports WoL, Teaming, Jumbo Frame & PXE), RJ45 - GbE1: Intel® I219LM - GbE2: Intel® I210	
USB	• 3x USB 3.2 Gen2 (Type A), 2x USB 2.0 (Type A)	
Serial Port	• 4x RS-232/422/485 with Auto Flow Control Support 5V/12V, DB9	
DIO	• 16x Isolated Digital I/O (8in/8out), 20-Pin Terminal Block	
Power Mode Switch	• 1x AT/ATX Mode Switch	
Power Switch	• 1x ATX Power On/Off Switch	
Reset Button	• 1x Reset Button	
Clear CMOS Switch	• 1x Clear CMOS Switch	
Remote Power On/Off	• 1x Remote Power On/Off Connector, 2-pin Terminal Block	
Power Ignition Sensing	• 1x Ignition DIP Switch (12V/24V, need to work with CFM module)	
Storage		
SSD/HDD	• 2x 2.5” HDD/SSD Drive Bay (SATA 3.0), Supports RAID 0/1	

Expansion		
Mini PCI Express	• 2x Full-size Mini-PCIe Sockets	
PCI Express		• 1x PCI or 1x PCIe x4 Expansion slot with Optional Riser Card * Support maximum dimension of add-on card (H x L): 111mm x 169mm
M.2 E Key Socket	• 1x M.2 2230 E Key Socket for Wireless Module, Supports Intel CRF Module	
SIM Socket	• 1 x Front Accessible SIM Socket	
Universal Bracket		• 2x Universal I/O Bracket
CFM (Control Function Module) Interface	• 2x Control Function Module (CFM) Interface	
CDS (Convertible Display System) Technology	• 1x Convertible Display System (CDS) Interface	
Antenna Holes	• 4x Antenna Holes	
Other Function		
Clear CMOS Switch	• 1 x Clear CMOS Switch	
Instant Reboot	• Support 0.2sec	
Watchdog Timer	• Software Programmable Supports 256 Levels System Reset	
Internal Speaker	• AMP 2W + 2W	
OSD Function	• LCD On/Off, Brightness Up, Brightness Down	
Power		
AT/ATX Power	• Support AT, ATX Mode	
Power Input	• 1x 3-pin Terminal Block Connector with Power Input 9-48VDC	
Power Adapter (Optional)	• 1x Optional AC/DC 12V/5A, 60W or 24V/5A 120W	
Physical		
Dimension (W x D x H)	• 254.5 x 190 x 41.5mm	• 254.5 x 190 x 61 mm
Weight Information	• 2.2 kg	• 2.7 kg
Mechanical Construction	• Extruded Aluminum with Heavy Duty Metal	
Mounting	• Wall / VESA / CDS / DIN Rail	
Physical Design	• Fanless Design • Jumper-less Design	
Reliability & Protection		
Reverse Power Input	• Yes	
Over Voltage Protection	• Protection Range: 51-58V • Protection Type: shut down operating voltage, • re-power on at the present level to recover	
Over Current Protection	• 15A	

CMOS Battery Backup	• SuperCap Integrated for CMOS Battery Maintenance-free Operation	
MTBF	• 231,243 hours	
Operating System		
Microsoft® Windows®	• Windows®10	
Linux	• Supports by project	
Environment		
Operating Temperature	• Ambient with Air Flow: -40°C to 70°C (with Extended Temperature Peripherals)	
Storage Temperature	• -40°C to 70°C	
Relative humidity	• 95% RH @ 70°C (Non-condensing)	
Shock	• Operating, 50 Grms, Half-sine 11 ms Duration (w/ SSD, according to IEC60068-2-27)	
Vibration	• Operating, 5 Grms, 5-500 Hz, 3 Axes (w/ SSD, according to IEC60068-2-64)	• Operating, 5 Grms, 5-500 Hz, 3 Axes (w/ SSD, according to IEC60068-2-64) • Operating, 1 Grms, 10-500 Hz, 3 Axes (w/ CV-W124 only, according to IEC60068-2-6)
Safety	• UL, cUL, CB, IEC/EN62368-1	
Fire Protection	• EN45545-2	

** Product Specifications and features are for reference only and are subject to change without prior notice. For more information, please refer to the latest product datasheet from Cincoze's website.*

Dimension

CS-112HC/P2102 **Unit: mm**

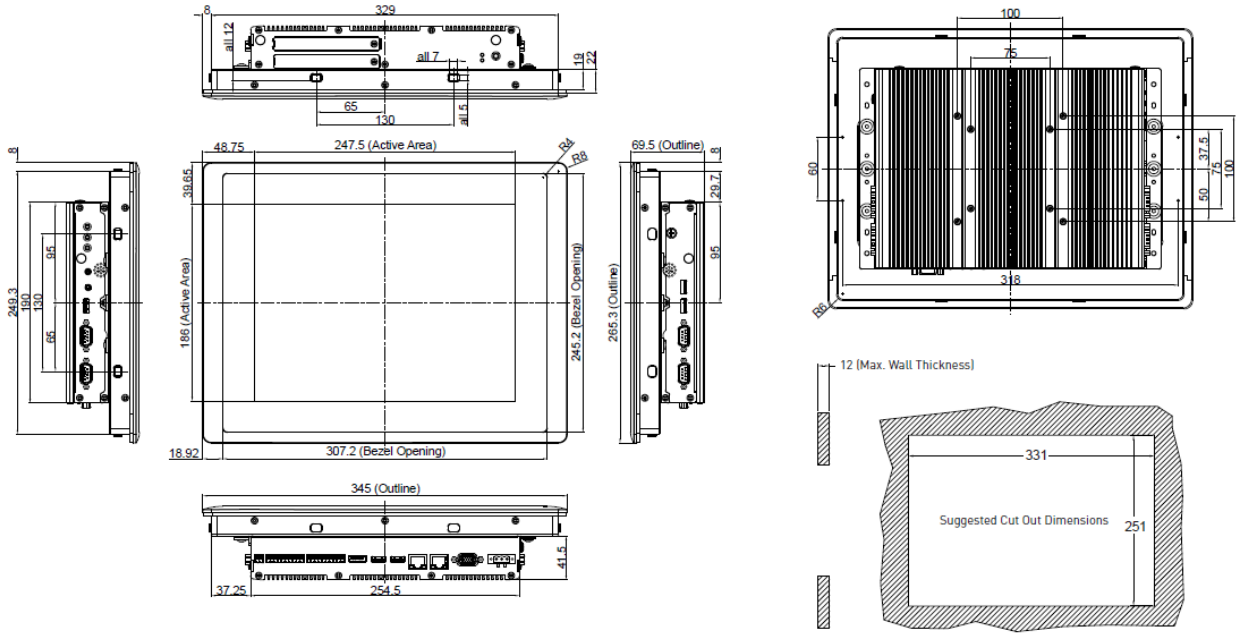

CS-112HC/P2102E **Unit: mm**

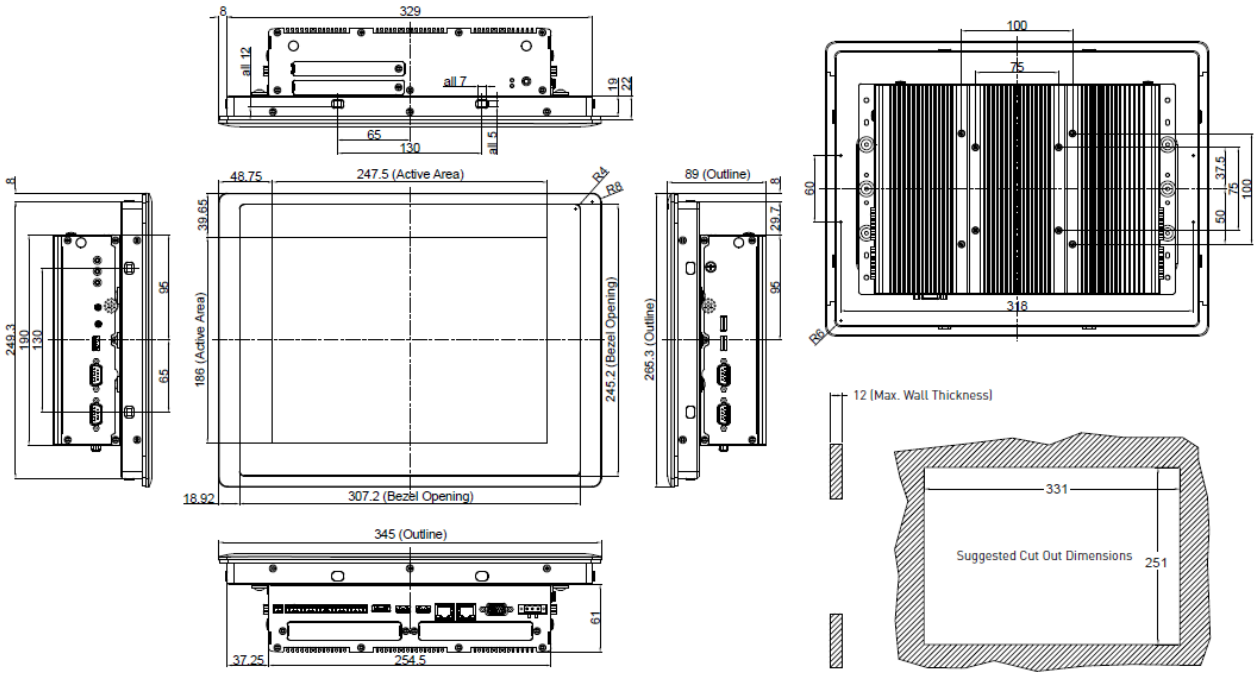

1.4.2 CS-115C/P2102 Series

Model Name	CS-115C
Display	
LCD Size	• 15" (4:3)
Max. Resolution	• 1024 x 768
Brightness (cd/m2)	• 1800
Contrast Ratio	• 800 : 1
LCD Color	• 16.2M
Pixel Pitch (mm)	• 0.297 (H) x 0.297(V)
Viewing Angle	• 160 / 150
Backlight MTBF	• 50,000 hrs (LED Backlight)
Touchscreen	
Touchscreen Type	• Projected Capacitive
Wet Touch Tracking	✓
Physical	
Dimension (WxDxH)	• 408 x 312.4 x 59.2 mm
Weight	• 4.36kg
Construction	• Flat Rugged Aluminum Die-casting Bezel
Power	
Power Consumption	• 27.26W (Max.)
Environment	
Front Panel Protection	• IP 65 Compliant
Operating Temperature	• -20°C to 70°C (-4°F to 158°F) (With Industrial Grade Peripherals; Ambient with air flow)
Storage Temperature	• -30°C to 70°C (-22°F to 158°F)
Relative Humidity	• 90% RH @ 40°C (non-condensing)
EMC	• CE, UKCA, FCC, ICES-003 Class A
EMI	• CISPR 32 Conducted & Radiated: Class A • EN/BS EN 55032 Conducted & Radiated: Class A • EN/BS EN IEC 61000-3-2 Harmonic current emissions: Class A • EN/BS EN61000-3-3 Voltage fluctuations & flicker • FCC 47 CFR Part 15B, ICES-003 Conducted & Radiated: Class A
EMS	• EN/IEC 61000-4-2 ESD: Contact: 4 kV; Air: 8 kV • EN/IEC 61000-4-3 RS: 80 MHz to 1000 MHz: 3 V/m • EN/IEC 61000-4-4 EFT: AC Power: 1 kV; DC Power: 0.5 kV; Signal: 0.5 kV • EN/IEC 61000-4-5 Surges: AC Power: 2 kV; Signal: 1 kV • EN/IEC 61000-4-6 CS: 3V • EN/IEC 61000-4-8 PFMF: 50 Hz, 1A/m

	• EN/IEC 61000-4-11 Voltage Dips & Voltage Interruptions: 0.5 cycles at 50 Hz
Safety	• UL, cUL, CB, IEC, EN 62368-1

Model Name	P2102	P2102E
System		
Processor	• Onboard 8th Intel® Core™ U Processors (Whiskey Lake) - Intel® Core™ i5-8365UE Quad Core Processor (6M Cache, up to 4.10 GHz) - Intel® Core™ i3-8145UE Dual Core Processor (4M Cache, up to 3.90 GHz) - TDP: 15 W	
Memory	• 2x DDR4 2400 MHz 260-Pin SO-DIMM Socket • Support Un-buffered and Non-ECC Type up to 64 GB	
Graphics		
Graphics Engine	• Integrated Intel® UHD Graphics 620	
Maximum Display Output	• Supports Triple Independent Display (1x CDS, 1x VGA, 1x DisplayPort)	
VGA	• 1x VGA Connector (1920 x 1200 @60Hz)	
DP	• 1x DisplayPort Connector (4096 x 2304 @ 60Hz)	
Audio		
Audio Codec	• Realtek® ALC888, High Definition Audio	
Speaker-out	• 1x Speaker-out, Phone Jack 3.5mm	
Mic-in	• 1x Mic-in, Phone Jack 3.5mm	
I/O		
LAN	• 2x GbE LAN (Supports WoL, Teaming, Jumbo Frame & PXE), RJ45 - GbE1: Intel® I219LM - GbE2: Intel® I210	
USB	• 3x USB 3.2 Gen2 (Type A), 2x USB 2.0 (Type A)	
Serial Port	• 4x RS-232/422/485 with Auto Flow Control Support 5V/12V, DB9	
DIO	• 16x Isolated Digital I/O (8in/8out), 20-Pin Terminal Block	
Power Mode Switch	• 1x AT/ATX Mode Switch	
Power Switch	• 1x ATX Power On/Off Switch	
Reset Button	• 1x Reset Button	
Clear CMOS Switch	• 1x Clear CMOS Switch	
Remote Power On/Off	• 1x Remote Power On/Off Connector, 2-pin Terminal Block	
Power Ignition Sensing	• 1x Ignition DIP Switch (12V/24V, need to work with CFM module)	
Storage		
SSD/HDD	• 2x 2.5” HDD/SSD Drive Bay (SATA 3.0), Supports RAID 0/1	
Expansion		
Mini PCI Express	• 2x Full-size Mini-PCIe Sockets	

PCI Express		• 1x PCI or 1x PCIe x4 Expansion slot with Optional Riser Card * Support maximum dimension of add-on card (H x L): 111mm x 169mm
M.2 E Key Socket	• 1x M.2 2230 E Key Socket for Wireless Module, Supports Intel CRF Module	
SIM Socket	• 1 x Front Accessible SIM Socket	
Universal Bracket		• 2x Universal I/O Bracket
CFM (Control Function Module) Interface	• 2x Control Function Module (CFM) Interface	
CDS (Convertible Display System) Technology	• 1x Convertible Display System (CDS) Interface	
Antenna Holes	• 4x Antenna Holes	
Other Function		
Clear CMOS Switch	• 1 x Clear CMOS Switch	
Instant Reboot	• Support 0.2sec	
Watchdog Timer	• Software Programmable Supports 256 Levels System Reset	
Internal Speaker	• AMP 2W + 2W	
OSD Function	• LCD On/Off, Brightness Up, Brightness Down	
Power		
AT/ATX Power	• Support AT, ATX Mode	
Power Input	• 1x 3-pin Terminal Block Connector with Power Input 9-48VDC	
Power Adapter (Optional)	• 1x Optional AC/DC 12V/5A, 60W or 24V/5A 120W	
Physical		
Dimension (W x D x H)	• 254.5 x 190 x 41.5mm	• 254.5 x 190 x 61 mm
Weight Information	• 2.2 kg	• 2.7 kg
Mechanical Construction	• Extruded Aluminum with Heavy Duty Metal	
Mounting	• Wall / VESA / CDS / DIN Rail	
Physical Design	• Fanless Design • Jumper-less Design	
Reliability & Protection		
Reverse Power Input	• Yes	
Over Voltage Protection	• Protection Range: 51-58V • Protection Type: shut down operating voltage, • re-power on at the present level to recover	
Over Current Protection	• 15A	
CMOS Battery Backup	• SuperCap Integrated for CMOS Battery Maintenance-free Operation	
MTBF	• 231,243 hours	

Operating System		
Microsoft® Windows®	• Windows®10	
Linux	• Supports by project	
Environment		
Operating Temperature	• Ambient with Air Flow: -40°C to 70°C (with Extended Temperature Peripherals)	
Storage Temperature	• -40°C to 70°C	
Relative humidity	• 95% RH @ 70°C (Non-condensing)	
Shock	• Operating, 50 Grms, Half-sine 11 ms Duration (w/ SSD, according to IEC60068-2-27)	
Vibration	• Operating, 5 Grms, 5-500 Hz, 3 Axes (w/ SSD, according to IEC60068-2-64)	• Operating, 5 Grms, 5-500 Hz, 3 Axes (w/ SSD, according to IEC60068-2-64) • Operating, 1 Grms, 10-500 Hz, 3 Axes (w/ CV-W124 only, according to IEC60068-2-6)
Safety	• UL, cUL, CB, IEC/EN62368-1	
Fire Protection	• EN45545-2	

** Product Specifications and features are for reference only and are subject to change without prior notice. For more information, please refer to the latest product datasheet from Cincoze's website.*

Dimension

CS-115C/P2102 **Unit: mm**

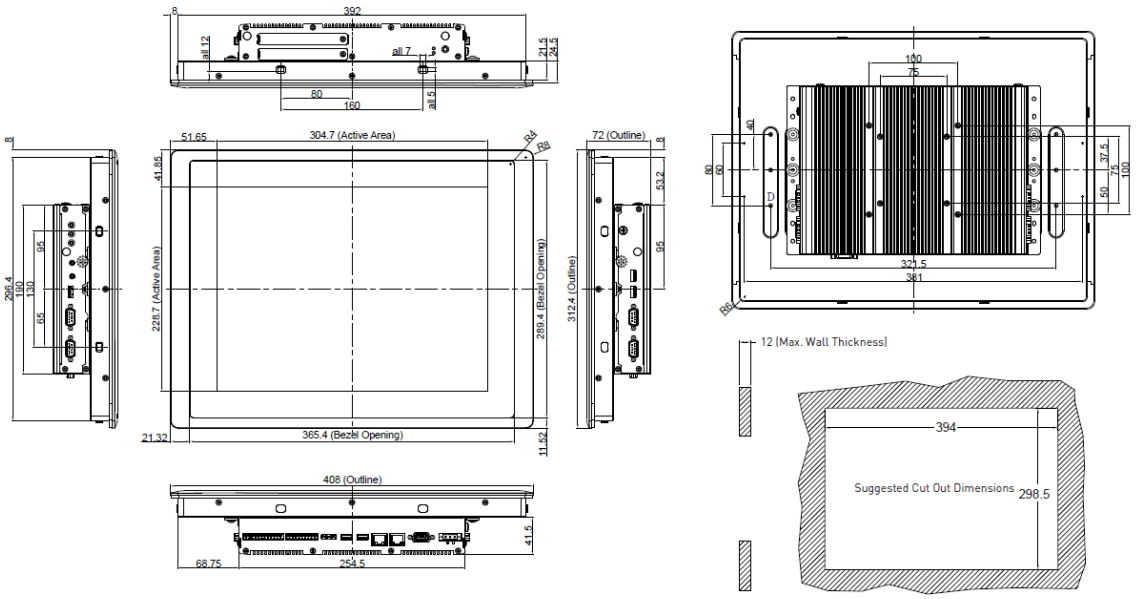

CS-115C/P2102E **Unit: mm**

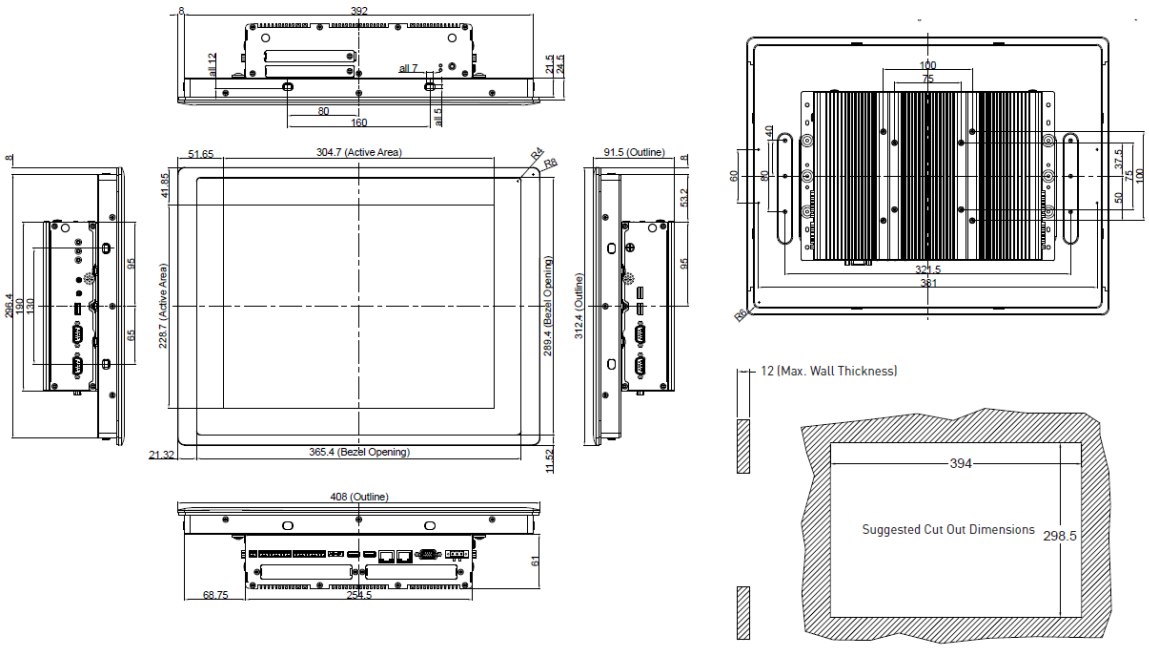

1.4.3 CS-W115FHC/P2102 Series

Model Name	CS-W115FHC
Display	
LCD Size	• 15.6" (16:9)
Max. Resolution	• 1920 x 1080 (Full HD)
Brightness (cd/m2)	• 1,200
Contrast Ratio	• 800 : 1
LCD Color	• 16.7M
Pixel Pitch (mm)	• 0.17925 (H) x 0.17925 (V)
Viewing Angle	• 178 / 178
Backlight MTBF	• 50,000 hrs (LED Backlight)
Touchscreen	
Touchscreen Type	• Projected Capacitive
Wet Touch Tracking	✓
Physical	
Dimension (WxDxH)	• 420 x 254 x 66.2 mm
Weight	• 3.58 kg
Construction	• Flat Rugged Aluminum Die-casting Bezel
Power	
Power Consumption	• 25W (Max.)
Environment	
Front Panel Protection	• IP 65 Compliant
Operating Temperature	• -20°C to 70°C (-4°F to 158°F) (With Industrial Grade Peripherals; Ambient with air flow)
Storage Temperature	• -40°C to 80°C (-40°F to 176°F)
Relative Humidity	• 90% RH @ 40°C (non-condensing)
EMC	• CE, UKCA, FCC, ICES-003 Class A
EMI	• CISPR 32 Conducted & Radiated: Class A • EN/BS EN 55032 Conducted & Radiated: Class A • EN/BS EN IEC 61000-3-2 Harmonic current emissions: Class A • EN/BS EN61000-3-3 Voltage fluctuations & flicker • FCC 47 CFR Part 15B, ICES-003 Conducted & Radiated: Class A
EMS	• EN/IEC 61000-4-2 ESD: Contact: 4 kV; Air: 8 kV • EN/IEC 61000-4-3 RS: 80 MHz to 1000 MHz: 3 V/m • EN/IEC 61000-4-4 EFT: AC Power: 1 kV; DC Power: 0.5 kV; Signal: 0.5 kV • EN/IEC 61000-4-5 Surges: AC Power: 2 kV; Signal: 1 kV • EN/IEC 61000-4-6 CS: 3V • EN/IEC 61000-4-8 PFMF: 50 Hz, 1A/m

	• EN/IEC 61000-4-11 Voltage Dips & Voltage Interruptions: 0.5 cycles at 50 Hz
Safety	• UL, cUL, CB, IEC, EN 62368-1

Model Name	P2102	P2102E
System		
Processor	• Onboard 8th Intel® Core™ U Processors (Whiskey Lake) - Intel® Core™ i5-8365UE Quad Core Processor (6M Cache, up to 4.10 GHz) - Intel® Core™ i3-8145UE Dual Core Processor (4M Cache, up to 3.90 GHz) - TDP: 15 W	
Memory	• 2x DDR4 2400 MHz 260-Pin SO-DIMM Socket • Support Un-buffered and Non-ECC Type up to 64 GB	
Graphics		
Graphics Engine	• Integrated Intel® UHD Graphics 620	
Maximum Display Output	• Supports Triple Independent Display (1x CDS, 1x VGA, 1x DisplayPort)	
VGA	• 1x VGA Connector (1920 x 1200 @60Hz)	
DP	• 1x DisplayPort Connector (4096 x 2304 @ 60Hz)	
Audio		
Audio Codec	• Realtek® ALC888, High Definition Audio	
Speaker-out	• 1x Speaker-out, Phone Jack 3.5mm	
Mic-in	• 1x Mic-in, Phone Jack 3.5mm	
I/O		
LAN	• 2x GbE LAN (Supports WoL, Teaming, Jumbo Frame & PXE), RJ45 - GbE1: Intel® I219LM - GbE2: Intel® I210	
USB	• 3x USB 3.2 Gen2 (Type A), 2x USB 2.0 (Type A)	
Serial Port	• 4x RS-232/422/485 with Auto Flow Control Support 5V/12V, DB9	
DIO	• 16x Isolated Digital I/O (8in/8out), 20-Pin Terminal Block	
Power Mode Switch	• 1x AT/ATX Mode Switch	
Power Switch	• 1x ATX Power On/Off Switch	
Reset Button	• 1x Reset Button	
Clear CMOS Switch	• 1x Clear CMOS Switch	
Remote Power On/Off	• 1x Remote Power On/Off Connector, 2-pin Terminal Block	
Power Ignition Sensing	• 1x Ignition DIP Switch (12V/24V, need to work with CFM module)	
Storage		
SSD/HDD	• 2x 2.5” HDD/SSD Drive Bay (SATA 3.0), Supports RAID 0/1	
Expansion		
Mini PCI Express	• 2x Full-size Mini-PCIe Sockets	

PCI Express		• 1x PCI or 1x PCIe x4 Expansion slot with Optional Riser Card * Support maximum dimension of add-on card (H x L): 111mm x 169mm
M.2 E Key Socket	• 1x M.2 2230 E Key Socket for Wireless Module, Supports Intel CRF Module	
SIM Socket	• 1 x Front Accessible SIM Socket	
Universal Bracket		• 2x Universal I/O Bracket
CFM (Control Function Module) Interface	• 2x Control Function Module (CFM) Interface	
CDS (Convertible Display System) Technology	• 1x Convertible Display System (CDS) Interface	
Antenna Holes	• 4x Antenna Holes	
Other Function		
Clear CMOS Switch	• 1 x Clear CMOS Switch	
Instant Reboot	• Support 0.2sec	
Watchdog Timer	• Software Programmable Supports 256 Levels System Reset	
Internal Speaker	• AMP 2W + 2W	
OSD Function	• LCD On/Off, Brightness Up, Brightness Down	
Power		
AT/ATX Power	• Support AT, ATX Mode	
Power Input	• 1x 3-pin Terminal Block Connector with Power Input 9-48VDC	
Power Adapter (Optional)	• 1x Optional AC/DC 12V/5A, 60W or 24V/5A 120W	
Physical		
Dimension (W x D x H)	• 254.5 x 190 x 41.5mm	• 254.5 x 190 x 61 mm
Weight Information	• 2.2 kg	• 2.7 kg
Mechanical Construction	• Extruded Aluminum with Heavy Duty Metal	
Mounting	• Wall / VESA / CDS / DIN Rail	
Physical Design	• Fanless Design • Jumper-less Design	
Reliability & Protection		
Reverse Power Input	• Yes	
Over Voltage Protection	• Protection Range: 51-58V • Protection Type: shut down operating voltage, • re-power on at the present level to recover	
Over Current Protection	• 15A	
CMOS Battery Backup	• SuperCap Integrated for CMOS Battery Maintenance-free Operation	
MTBF	• 231,243 hours	

Operating System		
Microsoft® Windows®	• Windows®10	
Linux	• Supports by project	
Environment		
Operating Temperature	• Ambient with Air Flow: -40°C to 70°C (with Extended Temperature Peripherals)	
Storage Temperature	• -40°C to 70°C	
Relative humidity	• 95% RH @ 70°C (Non-condensing)	
Shock	• Operating, 50 Grms, Half-sine 11 ms Duration (w/ SSD, according to IEC60068-2-27)	
Vibration	• Operating, 5 Grms, 5-500 Hz, 3 Axes (w/ SSD, according to IEC60068-2-64)	• Operating, 5 Grms, 5-500 Hz, 3 Axes (w/ SSD, according to IEC60068-2-64) • Operating, 1 Grms, 10-500 Hz, 3 Axes (w/ CV-W124 only, according to IEC60068-2-6)
Safety	• UL, cUL, CB, IEC/EN62368-1	
Fire Protection	• EN45545-2	

** Product Specifications and features are for reference only and are subject to change without prior notice. For more information, please refer to the latest product datasheet from Cincoze's website.*

Dimension

CS-W115FHC/P2102 **Unit: mm**

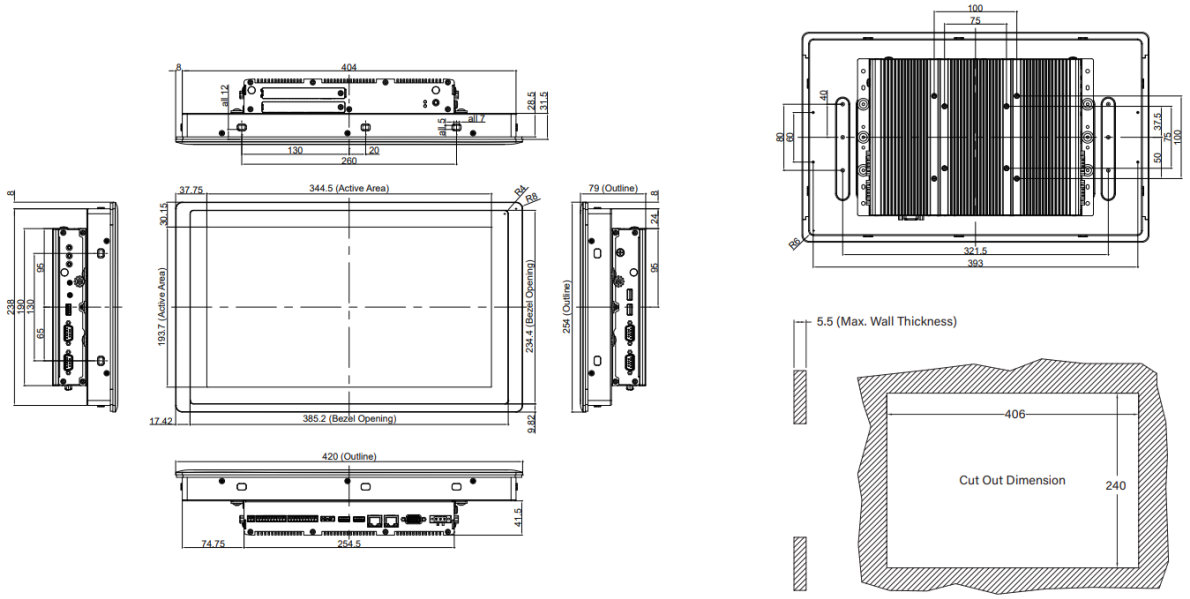

CS-W115FHC/P2102E **Unit: mm**

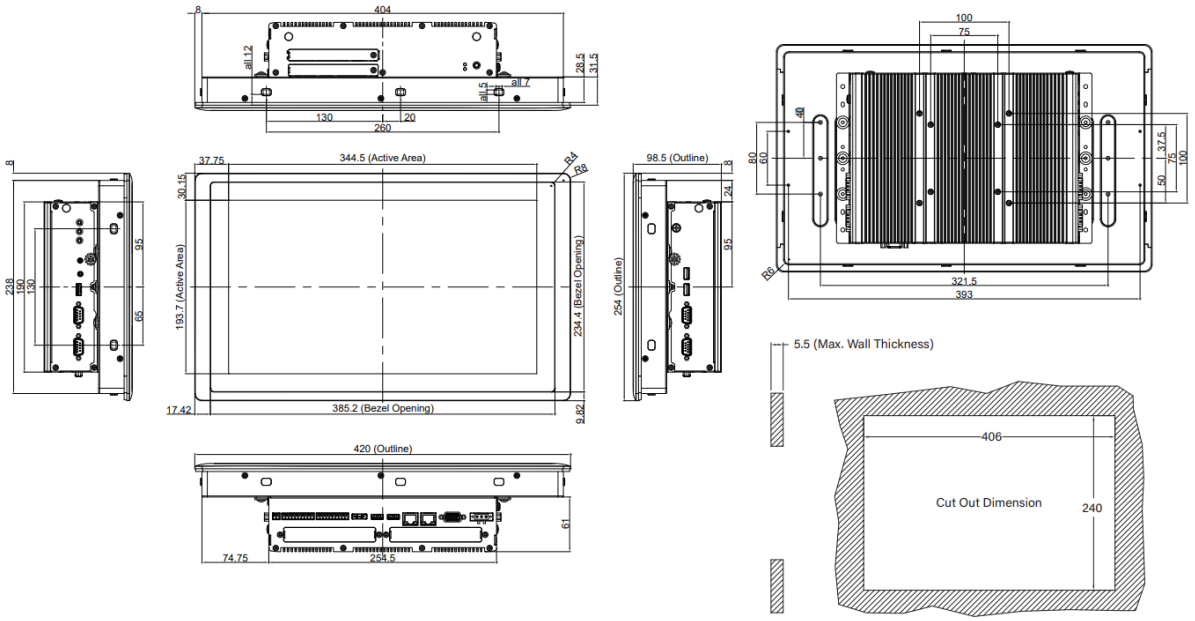

1.4.4 CS-117C/P2102 Series

Model Name	CS-117C
Display	
LCD Size	• 17" (5:4)
Max. Resolution	• 1280 x 1024
Brightness (cd/m2)	• 1500
Contrast Ratio	• 800 : 1
LCD Color	• 16.7M
Pixel Pitch (mm)	• 0.264 (H) x 0.264 (V)
Viewing Angle	• 160 / 140
Backlight MTBF	• 50,000 hrs (LED Backlight)
Touchscreen	
Touchscreen Type	• Projected Capacitive
Wet Touch Tracking	✓
Physical	
Dimension (WxDxH)	• 450 x 350 x 63.2mm
Weight	• 5.64 kg
Construction	• Flat Rugged Aluminum Die-casting Bezel
Power	
Power Consumption	• 30.65W (Typ.)
Environment	
Front Panel Protection	• IP 65 Compliant
Operating Temperature	• -20°C to 70°C (-4°F to 158°F) (With Industrial Grade Peripherals; Ambient with air flow)
Storage Temperature	• -30°C to 80°C (-22°F to 176°F)
Relative Humidity	• 90% RH @ 40°C (non-condensing)
EMC	• CE, UKCA, FCC, ICES-003 Class A
EMI	• CISPR 32 Conducted & Radiated: Class A • EN/BS EN 55032 Conducted & Radiated: Class A • EN/BS EN IEC 61000-3-2 Harmonic current emissions: Class A • EN/BS EN61000-3-3 Voltage fluctuations & flicker • FCC 47 CFR Part 15B, ICES-003 Conducted & Radiated: Class A
EMS	• EN/IEC 61000-4-2 ESD: Contact: 4 kV; Air: 8 kV • EN/IEC 61000-4-3 RS: 80 MHz to 1000 MHz: 3 V/m • EN/IEC 61000-4-4 EFT: AC Power: 1 kV; DC Power: 0.5 kV; Signal: 0.5 kV • EN/IEC 61000-4-5 Surges: AC Power: 2 kV; Signal: 1 kV • EN/IEC 61000-4-6 CS: 3V • EN/IEC 61000-4-8 PFMF: 50 Hz, 1A/m

	• EN/IEC 61000-4-11 Voltage Dips & Voltage Interruptions: 0.5 cycles at 50 Hz
Safety	• UL, cUL, CB, IEC, EN 62368-1

Model Name	P2102	P2102E
System		
Processor	• Onboard 8th Intel® Core™ U Processors (Whiskey Lake) - Intel® Core™ i5-8365UE Quad Core Processor (6M Cache, up to 4.10 GHz) - Intel® Core™ i3-8145UE Dual Core Processor (4M Cache, up to 3.90 GHz) - TDP: 15 W	
Memory	• 2x DDR4 2400 MHz 260-Pin SO-DIMM Socket • Support Un-buffered and Non-ECC Type up to 64 GB	
Graphics		
Graphics Engine	• Integrated Intel® UHD Graphics 620	
Maximum Display Output	• Supports Triple Independent Display (1x CDS, 1x VGA, 1x DisplayPort)	
VGA	• 1x VGA Connector (1920 x 1200 @60Hz)	
DP	• 1x DisplayPort Connector (4096 x 2304 @ 60Hz)	
Audio		
Audio Codec	• Realtek® ALC888, High Definition Audio	
Speaker-out	• 1x Speaker-out, Phone Jack 3.5mm	
Mic-in	• 1x Mic-in, Phone Jack 3.5mm	
I/O		
LAN	• 2x GbE LAN (Supports WoL, Teaming, Jumbo Frame & PXE), RJ45 - GbE1: Intel® I219LM - GbE2: Intel® I210	
USB	• 3x USB 3.2 Gen2 (Type A), 2x USB 2.0 (Type A)	
Serial Port	• 4x RS-232/422/485 with Auto Flow Control Support 5V/12V, DB9	
DIO	• 16x Isolated Digital I/O (8in/8out), 20-Pin Terminal Block	
Power Mode Switch	• 1x AT/ATX Mode Switch	
Power Switch	• 1x ATX Power On/Off Switch	
Reset Button	• 1x Reset Button	
Clear CMOS Switch	• 1x Clear CMOS Switch	
Remote Power On/Off	• 1x Remote Power On/Off Connector, 2-pin Terminal Block	
Power Ignition Sensing	• 1x Ignition DIP Switch (12V/24V, need to work with CFM module)	
Storage		
SSD/HDD	• 2x 2.5” HDD/SSD Drive Bay (SATA 3.0), Supports RAID 0/1	
Expansion		
Mini PCI Express	• 2x Full-size Mini-PCIe Sockets	

PCI Express		• 1x PCI or 1x PCIe x4 Expansion slot with Optional Riser Card * Support maximum dimension of add-on card (H x L): 111mm x 169mm
M.2 E Key Socket	• 1x M.2 2230 E Key Socket for Wireless Module, Supports Intel CRF Module	
SIM Socket	• 1 x Front Accessible SIM Socket	
Universal Bracket		• 2x Universal I/O Bracket
CFM (Control Function Module) Interface	• 2x Control Function Module (CFM) Interface	
CDS (Convertible Display System) Technology	• 1x Convertible Display System (CDS) Interface	
Antenna Holes	• 4x Antenna Holes	
Other Function		
Clear CMOS Switch	• 1 x Clear CMOS Switch	
Instant Reboot	• Support 0.2sec	
Watchdog Timer	• Software Programmable Supports 256 Levels System Reset	
Internal Speaker	• AMP 2W + 2W	
OSD Function	• LCD On/Off, Brightness Up, Brightness Down	
Power		
AT/ATX Power	• Support AT, ATX Mode	
Power Input	• 1x 3-pin Terminal Block Connector with Power Input 9-48VDC	
Power Adapter (Optional)	• 1x Optional AC/DC 12V/5A, 60W or 24V/5A 120W	
Physical		
Dimension (W x D x H)	• 254.5 x 190 x 41.5mm	• 254.5 x 190 x 61 mm
Weight Information	• 2.2 kg	• 2.7 kg
Mechanical Construction	• Extruded Aluminum with Heavy Duty Metal	
Mounting	• Wall / VESA / CDS / DIN Rail	
Physical Design	• Fanless Design • Jumper-less Design	
Reliability & Protection		
Reverse Power Input	• Yes	
Over Voltage Protection	• Protection Range: 51-58V • Protection Type: shut down operating voltage, • re-power on at the present level to recover	
Over Current Protection	• 15A	
CMOS Battery Backup	• SuperCap Integrated for CMOS Battery Maintenance-free Operation	
MTBF	• 231,243 hours	

Operating System		
Microsoft® Windows®	• Windows®10	
Linux	• Supports by project	
Environment		
Operating Temperature	• Ambient with Air Flow: -40°C to 70°C (with Extended Temperature Peripherals)	
Storage Temperature	• -40°C to 70°C	
Relative humidity	• 95% RH @ 70°C (Non-condensing)	
Shock	• Operating, 50 Grms, Half-sine 11 ms Duration (w/ SSD, according to IEC60068-2-27)	
Vibration	• Operating, 5 Grms, 5-500 Hz, 3 Axes (w/ SSD, according to IEC60068-2-64)	• Operating, 5 Grms, 5-500 Hz, 3 Axes (w/ SSD, according to IEC60068-2-64) • Operating, 1 Grms, 10-500 Hz, 3 Axes (w/ CV-W124 only, according to IEC60068-2-6)
Safety	• UL, cUL, CB, IEC/EN62368-1	
Fire Protection	• EN45545-2	

** Product Specifications and features are for reference only and are subject to change without prior notice. For more information, please refer to the latest product datasheet from Cincoze's website.*

Dimension

CS-117C/P2102 **Unit: mm**

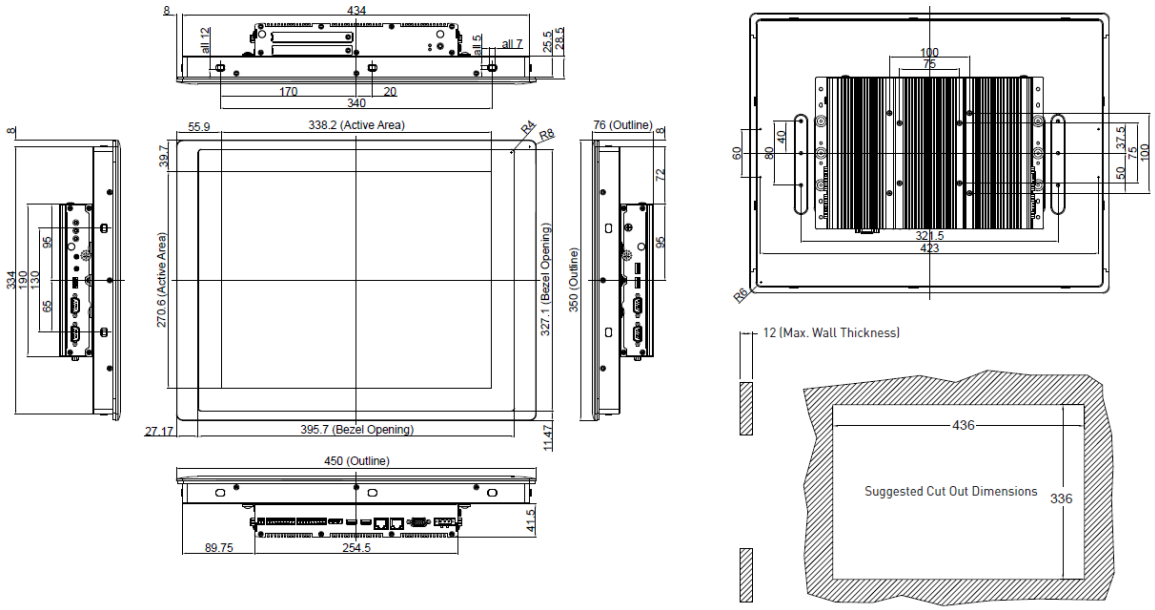

CS-117C/P2102E **Unit: mm**

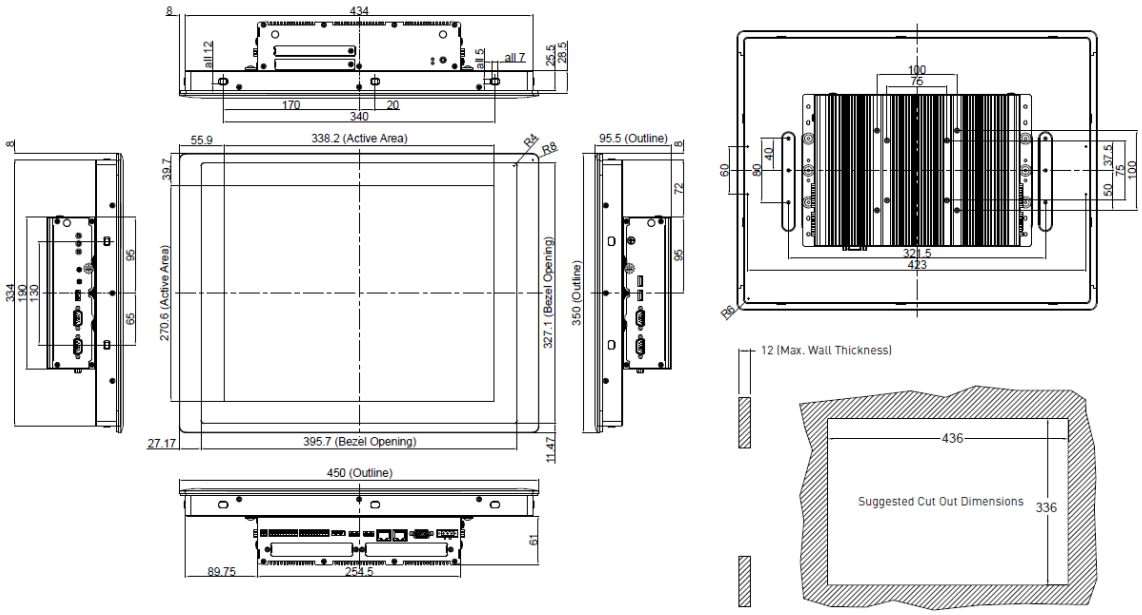

1.4.5 CS-119C/P2102 Series

Model Name	CS-119C
Display	
LCD Size	• 19" (5:4)
Max. Resolution	• 1280 x 1024 (SXGA)
Brightness (cd/m2)	• 1600
Contrast Ratio	• 1000 : 1
LCD Color	• 16.7M
Pixel Pitch (mm)	• 0.294 (H) x 0.294 (V)
Viewing Angle	• 170 / 160
Backlight MTBF	• 50,000 hrs (LED Backlight)
Touchscreen	
Touchscreen Type	• Projected Capacitive
Wet Touch Tracking	✓
Physical	
Dimension (WxDxH)	• 510 x 389.3 x 63.2 mm
Weight	• 6.96 kg
Construction	• Flat Rugged Aluminum Die-casting Bezel
Power	
Power Consumption	• 44.45W (Max.)
Environment	
Front Panel Protection	• IP 65 Compliant
Operating Temperature	• -20°C to 70°C (-4°F to 158°F) (With Industrial Grade Peripherals; Ambient with air flow)
Storage Temperature	• -30°C to 70°C (-22°F to 158°F)
Relative Humidity	• 90% RH @ 40°C (non-condensing)
EMC	• CE, UKCA, FCC, ICES-003 Class A
EMI	• CISPR 32 Conducted & Radiated: Class A • EN/BS EN 55032 Conducted & Radiated: Class A • EN/BS EN IEC 61000-3-2 Harmonic current emissions: Class A • EN/BS EN61000-3-3 Voltage fluctuations & flicker • FCC 47 CFR Part 15B, ICES-003 Conducted & Radiated: Class A
EMS	• EN/IEC 61000-4-2 ESD: Contact: 4 kV; Air: 8 kV • EN/IEC 61000-4-3 RS: 80 MHz to 1000 MHz: 3 V/m • EN/IEC 61000-4-4 EFT: AC Power: 1 kV; DC Power: 0.5 kV; Signal: 0.5 kV • EN/IEC 61000-4-5 Surges: AC Power: 2 kV; Signal: 1 kV • EN/IEC 61000-4-6 CS: 3V • EN/IEC 61000-4-8 PFMF: 50 Hz, 1A/m

	• EN/IEC 61000-4-11 Voltage Dips & Voltage Interruptions: 0.5 cycles at 50 Hz
Safety	• UL, cUL, CB, IEC, EN 62368-1

Model Name	P2102	P2102E
System		
Processor	• Onboard 8th Intel® Core™ U Processors (Whiskey Lake) - Intel® Core™ i5-8365UE Quad Core Processor (6M Cache, up to 4.10 GHz) - Intel® Core™ i3-8145UE Dual Core Processor (4M Cache, up to 3.90 GHz) - TDP: 15 W	
Memory	• 2x DDR4 2400 MHz 260-Pin SO-DIMM Socket • Support Un-buffered and Non-ECC Type up to 64 GB	
Graphics		
Graphics Engine	• Integrated Intel® UHD Graphics 620	
Maximum Display Output	• Supports Triple Independent Display (1x CDS, 1x VGA, 1x DisplayPort)	
VGA	• 1x VGA Connector (1920 x 1200 @60Hz)	
DP	• 1x DisplayPort Connector (4096 x 2304 @ 60Hz)	
Audio		
Audio Codec	• Realtek® ALC888, High Definition Audio	
Speaker-out	• 1x Speaker-out, Phone Jack 3.5mm	
Mic-in	• 1x Mic-in, Phone Jack 3.5mm	
I/O		
LAN	• 2x GbE LAN (Supports WoL, Teaming, Jumbo Frame & PXE), RJ45 - GbE1: Intel® I219LM - GbE2: Intel® I210	
USB	• 3x USB 3.2 Gen2 (Type A), 2x USB 2.0 (Type A)	
Serial Port	• 4x RS-232/422/485 with Auto Flow Control Support 5V/12V, DB9	
DIO	• 16x Isolated Digital I/O (8in/8out), 20-Pin Terminal Block	
Power Mode Switch	• 1x AT/ATX Mode Switch	
Power Switch	• 1x ATX Power On/Off Switch	
Reset Button	• 1x Reset Button	
Clear CMOS Switch	• 1x Clear CMOS Switch	
Remote Power On/Off	• 1x Remote Power On/Off Connector, 2-pin Terminal Block	
Power Ignition Sensing	• 1x Ignition DIP Switch (12V/24V, need to work with CFM module)	
Storage		
SSD/HDD	• 2x 2.5” HDD/SSD Drive Bay (SATA 3.0), Supports RAID 0/1	
Expansion		
Mini PCI Express	• 2x Full-size Mini-PCIe Sockets	

PCI Express		• 1x PCI or 1x PCIe x4 Expansion slot with Optional Riser Card * Support maximum dimension of add-on card (H x L): 111mm x 169mm
M.2 E Key Socket	• 1x M.2 2230 E Key Socket for Wireless Module, Supports Intel CRF Module	
SIM Socket	• 1 x Front Accessible SIM Socket	
Universal Bracket		• 2x Universal I/O Bracket
CFM (Control Function Module) Interface	• 2x Control Function Module (CFM) Interface	
CDS (Convertible Display System) Technology	• 1x Convertible Display System (CDS) Interface	
Antenna Holes	• 4x Antenna Holes	
Other Function		
Clear CMOS Switch	• 1 x Clear CMOS Switch	
Instant Reboot	• Support 0.2sec	
Watchdog Timer	• Software Programmable Supports 256 Levels System Reset	
Internal Speaker	• AMP 2W + 2W	
OSD Function	• LCD On/Off, Brightness Up, Brightness Down	
Power		
AT/ATX Power	• Support AT, ATX Mode	
Power Input	• 1x 3-pin Terminal Block Connector with Power Input 9-48VDC	
Power Adapter (Optional)	• 1x Optional AC/DC 12V/5A, 60W or 24V/5A 120W	
Physical		
Dimension (W x D x H)	• 254.5 x 190 x 41.5mm	• 254.5 x 190 x 61 mm
Weight Information	• 2.2 kg	• 2.7 kg
Mechanical Construction	• Extruded Aluminum with Heavy Duty Metal	
Mounting	• Wall / VESA / CDS / DIN Rail	
Physical Design	• Fanless Design • Jumper-less Design	
Reliability & Protection		
Reverse Power Input	• Yes	
Over Voltage Protection	• Protection Range: 51-58V • Protection Type: shut down operating voltage, • re-power on at the present level to recover	
Over Current Protection	• 15A	
CMOS Battery Backup	• SuperCap Integrated for CMOS Battery Maintenance-free Operation	
MTBF	• 231,243 hours	

Operating System		
Microsoft® Windows®	• Windows®10	
Linux	• Supports by project	
Environment		
Operating Temperature	• Ambient with Air Flow: -40°C to 70°C (with Extended Temperature Peripherals)	
Storage Temperature	• -40°C to 70°C	
Relative humidity	• 95% RH @ 70°C (Non-condensing)	
Shock	• Operating, 50 Grms, Half-sine 11 ms Duration (w/ SSD, according to IEC60068-2-27)	
Vibration	• Operating, 5 Grms, 5-500 Hz, 3 Axes (w/ SSD, according to IEC60068-2-64)	• Operating, 5 Grms, 5-500 Hz, 3 Axes (w/ SSD, according to IEC60068-2-64) • Operating, 1 Grms, 10-500 Hz, 3 Axes (w/ CV-W124 only, according to IEC60068-2-6)
Safety	• UL, cUL, CB, IEC/EN62368-1	
Fire Protection	• EN45545-2	

** Product Specifications and features are for reference only and are subject to change without prior notice. For more information, please refer to the latest product datasheet from Cincoze's website.*

Dimension

CS-119C/P2102 **Unit: mm**

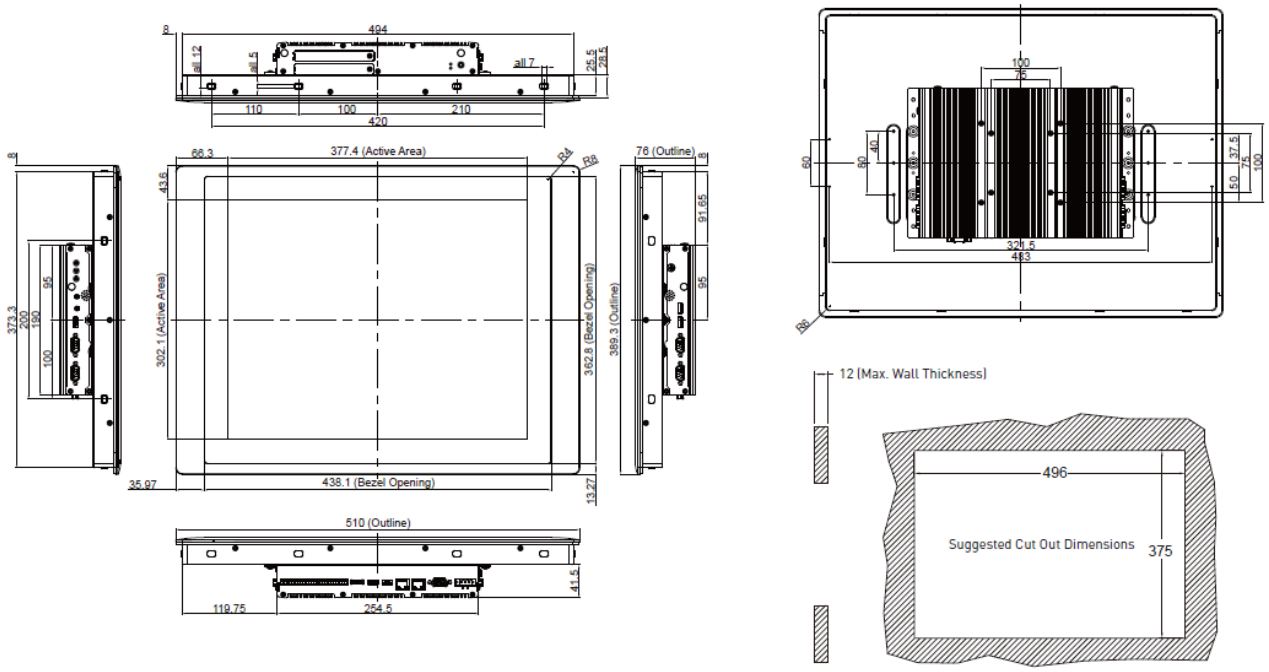

CS-119C/P2102E **Unit: mm**

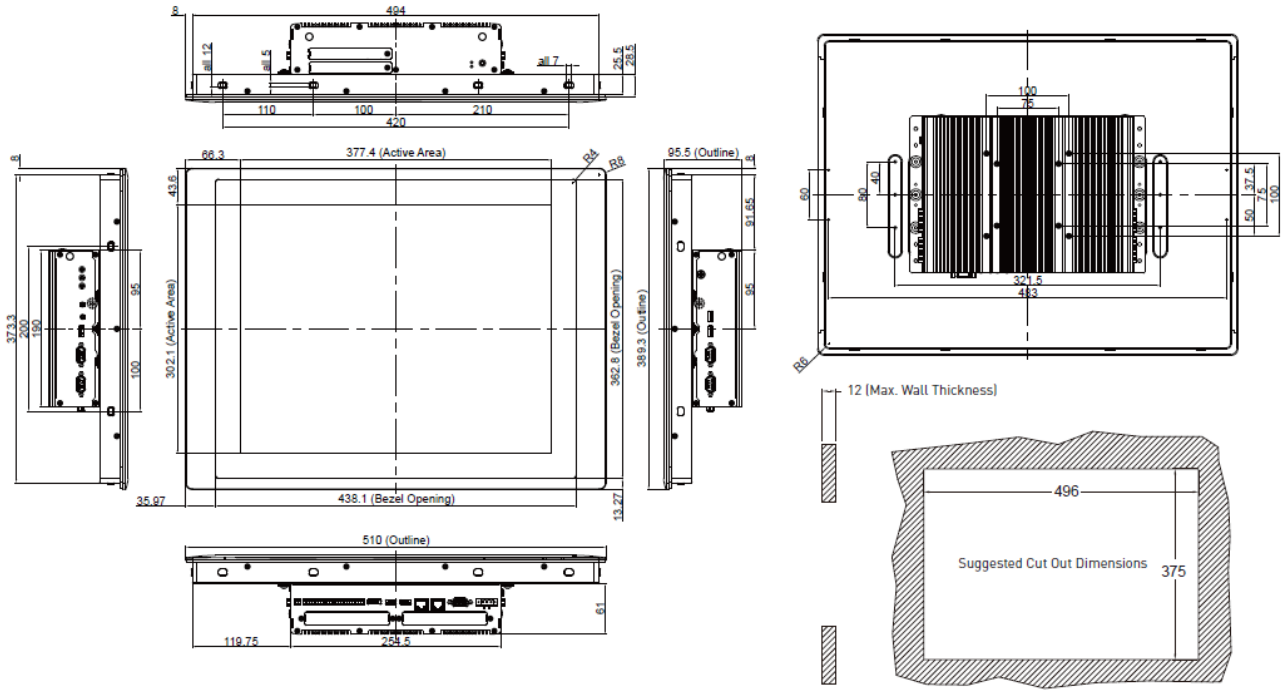

1.4.6 CS-W121C/P2102 Series

Model Name	CS-W121C
Display	
LCD Size	• 21.5” (16:9)
Max. Resolution	• 1920x1080 (Full HD)
Brightness (cd/m2)	• 1000
Contrast Ratio	• 5000 : 1
LCD Color	• 16.7M
Pixel Pitch (mm)	• 0.24825 (H) x 0.24825 (V)
Viewing Angle	• 178/178
Backlight MTBF	• 50,000 hrs (LED Backlight)
Touchscreen	
Touchscreen Type	• Projected Capacitive
Wet Touch Tracking	✓
Physical	
Dimension (WxDxH)	• 550 x 330.5 x 63.2mm
Weight	• 5.56 kg
Construction	• Flat Rugged Aluminum Die-casting Bezel
Power	
Power Consumption	• 31.25W (Max.)
Environment	
Front Panel Protection	• IP 65 Compliant
Operating Temperature	• -20°C to 70°C (-4°F to 158°F) (With Industrial Grade Peripherals; Ambient with air flow)
Storage Temperature	• -20°C to 80°C (-4°F to 176°F)
Relative Humidity	• 90% RH @ 40°C (non-condensing)
EMC	• CE, UKCA, FCC, ICES-003 Class A
EMI	• CISPR 32 Conducted & Radiated: Class A • EN/BS EN 55032 Conducted & Radiated: Class A • EN/BS EN IEC 61000-3-2 Harmonic current emissions: Class A • EN/BS EN61000-3-3 Voltage fluctuations & flicker • FCC 47 CFR Part 15B, ICES-003 Conducted & Radiated: Class A
EMS	• EN/IEC 61000-4-2 ESD: Contact: 4 kV; Air: 8 kV • EN/IEC 61000-4-3 RS: 80 MHz to 1000 MHz: 3 V/m • EN/IEC 61000-4-4 EFT: AC Power: 1 kV; DC Power: 0.5 kV; Signal: 0.5 kV • EN/IEC 61000-4-5 Surges: AC Power: 2 kV; Signal: 1 kV • EN/IEC 61000-4-6 CS: 3V • EN/IEC 61000-4-8 PFMF: 50 Hz, 1A/m

	• EN/IEC 61000-4-11 Voltage Dips & Voltage Interruptions: 0.5 cycles at 50 Hz
Safety	• UL, cUL, CB, IEC, EN 62368-1

Model Name	P2102	P2102E
System		
Processor	• Onboard 8th Intel® Core™ U Processors (Whiskey Lake) - Intel® Core™ i5-8365UE Quad Core Processor (6M Cache, up to 4.10 GHz) - Intel® Core™ i3-8145UE Dual Core Processor (4M Cache, up to 3.90 GHz) - TDP: 15 W	
Memory	• 2x DDR4 2400 MHz 260-Pin SO-DIMM Socket • Support Un-buffered and Non-ECC Type up to 64 GB	
Graphics		
Graphics Engine	• Integrated Intel® UHD Graphics 620	
Maximum Display Output	• Supports Triple Independent Display (1x CDS, 1x VGA, 1x DisplayPort)	
VGA	• 1x VGA Connector (1920 x 1200 @60Hz)	
DP	• 1x DisplayPort Connector (4096 x 2304 @ 60Hz)	
Audio		
Audio Codec	• Realtek® ALC888, High Definition Audio	
Speaker-out	• 1x Speaker-out, Phone Jack 3.5mm	
Mic-in	• 1x Mic-in, Phone Jack 3.5mm	
I/O		
LAN	• 2x GbE LAN (Supports WoL, Teaming, Jumbo Frame & PXE), RJ45 - GbE1: Intel® I219LM - GbE2: Intel® I210	
USB	• 3x USB 3.2 Gen2 (Type A), 2x USB 2.0 (Type A)	
Serial Port	• 4x RS-232/422/485 with Auto Flow Control Support 5V/12V, DB9	
DIO	• 16x Isolated Digital I/O (8in/8out), 20-Pin Terminal Block	
Power Mode Switch	• 1x AT/ATX Mode Switch	
Power Switch	• 1x ATX Power On/Off Switch	
Reset Button	• 1x Reset Button	
Clear CMOS Switch	• 1x Clear CMOS Switch	
Remote Power On/Off	• 1x Remote Power On/Off Connector, 2-pin Terminal Block	
Power Ignition Sensing	• 1x Ignition DIP Switch (12V/24V, need to work with CFM module)	
Storage		
SSD/HDD	• 2x 2.5” HDD/SSD Drive Bay (SATA 3.0), Supports RAID 0/1	
Expansion		
Mini PCI Express	• 2x Full-size Mini-PCIe Sockets	

PCI Express		• 1x PCI or 1x PCIe x4 Expansion slot with Optional Riser Card * Support maximum dimension of add-on card (H x L): 111mm x 169mm
M.2 E Key Socket	• 1x M.2 2230 E Key Socket for Wireless Module, Supports Intel CRF Module	
SIM Socket	• 1 x Front Accessible SIM Socket	
Universal Bracket		• 2x Universal I/O Bracket
CFM (Control Function Module) Interface	• 2x Control Function Module (CFM) Interface	
CDS (Convertible Display System) Technology	• 1x Convertible Display System (CDS) Interface	
Antenna Holes	• 4x Antenna Holes	
Other Function		
Clear CMOS Switch	• 1 x Clear CMOS Switch	
Instant Reboot	• Support 0.2sec	
Watchdog Timer	• Software Programmable Supports 256 Levels System Reset	
Internal Speaker	• AMP 2W + 2W	
OSD Function	• LCD On/Off, Brightness Up, Brightness Down	
Power		
AT/ATX Power	• Support AT, ATX Mode	
Power Input	• 1x 3-pin Terminal Block Connector with Power Input 9-48VDC	
Power Adapter (Optional)	• 1x Optional AC/DC 12V/5A, 60W or 24V/5A 120W	
Physical		
Dimension (W x D x H)	• 254.5 x 190 x 41.5mm	• 254.5 x 190 x 61 mm
Weight Information	• 2.2 kg	• 2.7 kg
Mechanical Construction	• Extruded Aluminum with Heavy Duty Metal	
Mounting	• Wall / VESA / CDS / DIN Rail	
Physical Design	• Fanless Design • Jumper-less Design	
Reliability & Protection		
Reverse Power Input	• Yes	
Over Voltage Protection	• Protection Range: 51-58V • Protection Type: shut down operating voltage, • re-power on at the present level to recover	
Over Current Protection	• 15A	
CMOS Battery Backup	• SuperCap Integrated for CMOS Battery Maintenance-free Operation	
MTBF	• 231,243 hours	

Operating System		
Microsoft® Windows®	• Windows®10	
Linux	• Supports by project	
Environment		
Operating Temperature	• Ambient with Air Flow: -40°C to 70°C (with Extended Temperature Peripherals)	
Storage Temperature	• -40°C to 70°C	
Relative humidity	• 95% RH @ 70°C (Non-condensing)	
Shock	• Operating, 50 Grms, Half-sine 11 ms Duration (w/ SSD, according to IEC60068-2-27)	
Vibration	• Operating, 5 Grms, 5-500 Hz, 3 Axes (w/ SSD, according to IEC60068-2-64)	• Operating, 5 Grms, 5-500 Hz, 3 Axes (w/ SSD, according to IEC60068-2-64) • Operating, 1 Grms, 10-500 Hz, 3 Axes (w/ CV-W124 only, according to IEC60068-2-6)
Safety	• UL, cUL, CB, IEC/EN62368-1	
Fire Protection	• EN45545-2	

** Product Specifications and features are for reference only and are subject to change without prior notice. For more information, please refer to the latest product datasheet from Cincoze's website.*

Dimension

CS-W121C/P2102 **Unit: mm**

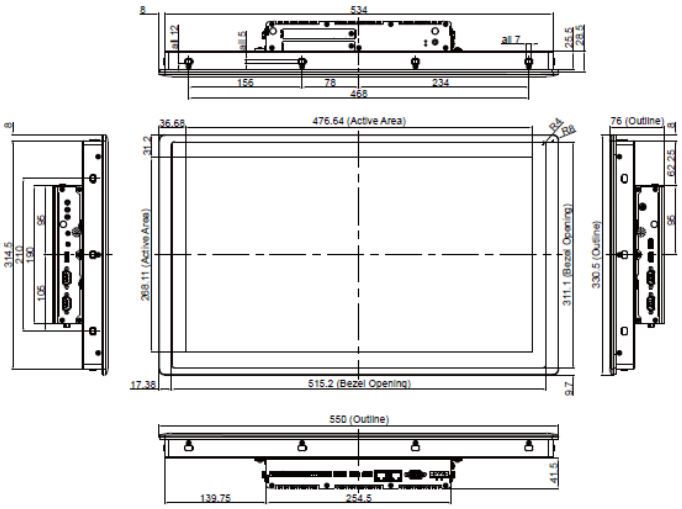

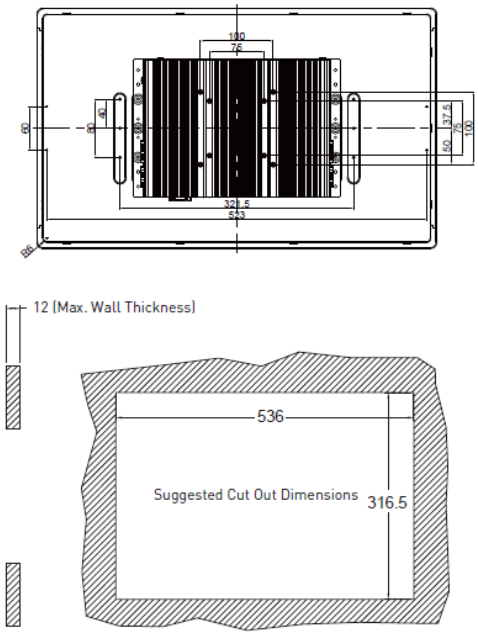

CS-W121C/P2102E **Unit: mm**

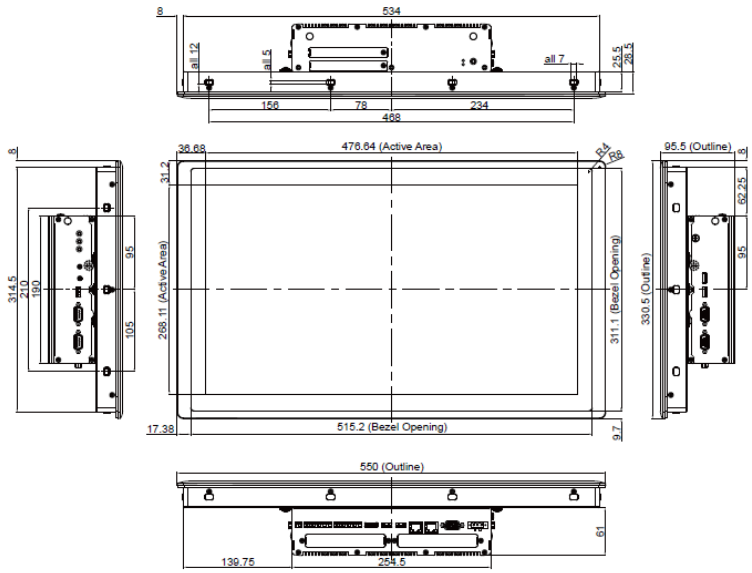

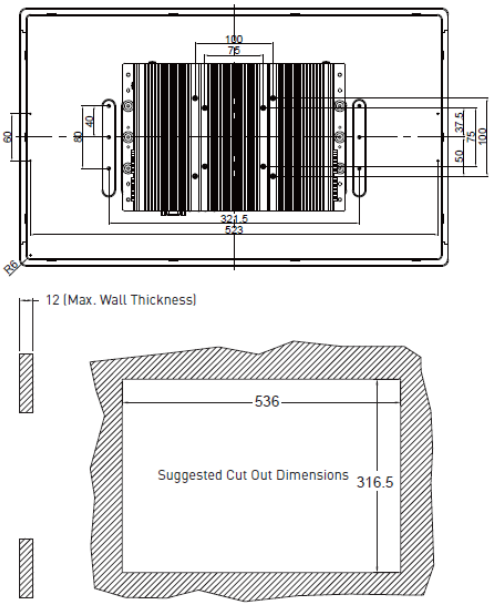

1.4.7 CS-W124C/P2102 Series

Model Name	CS-W124C
Display	
LCD Size	• 24” (16:9)
Max. Resolution	• 1920x1080
Brightness (cd/m2)	• 1500
Contrast Ratio	• 5000 : 1
LCD Color	• 16.7M
Pixel Pitch (mm)	• 0.27675 (H) x 0.27675 (V)
Viewing Angle	• 178/178
Backlight MTBF	• 50,000 hrs (LED Backlight)
Touchscreen	
Touchscreen Type	• Projected Capacitive
Wet Touch Tracking	✓
Physical	
Dimension (WxDxH)	• 605 x 373 x 63.2 mm
Weight	• 6.64 kg
Construction	• Flat Rugged Aluminum Die-casting Bezel
Power	
Power Consumption	• 48.51W (Typ.)
Environment	
Front Panel Protection	• IP 65 Compliant
Operating Temperature	• -20°C to 70°C (-4°F to 158°F) (With Industrial Grade Peripherals; Ambient with air flow)
Storage Temperature	• -30°C to 80°C (-22°F to 176°F)
Relative Humidity	• 90% RH @ 40°C (non-condensing)
EMC	• CE, UKCA, FCC, ICES-003 Class A
EMI	• CISPR 32 Conducted & Radiated: Class A • EN/BS EN 55032 Conducted & Radiated: Class A • EN/BS EN IEC 61000-3-2 Harmonic current emissions: Class A • EN/BS EN61000-3-3 Voltage fluctuations & flicker • FCC 47 CFR Part 15B, ICES-003 Conducted & Radiated: Class A
EMS	• EN/IEC 61000-4-2 ESD: Contact: 4 kV; Air: 8 kV • EN/IEC 61000-4-3 RS: 80 MHz to 1000 MHz: 3 V/m • EN/IEC 61000-4-4 EFT: AC Power: 1 kV; DC Power: 0.5 kV; Signal: 0.5 kV • EN/IEC 61000-4-5 Surges: AC Power: 2 kV; Signal: 1 kV • EN/IEC 61000-4-6 CS: 3V • EN/IEC 61000-4-8 PFMF: 50 Hz, 1A/m

	• EN/IEC 61000-4-11 Voltage Dips & Voltage Interruptions: 0.5 cycles at 50 Hz
Safety	• UL, cUL, CB, IEC, EN 62368-1

Model Name	P2102	P2102E
System		
Processor	• Onboard 8th Intel® Core™ U Processors (Whiskey Lake) - Intel® Core™ i5-8365UE Quad Core Processor (6M Cache, up to 4.10 GHz) - Intel® Core™ i3-8145UE Dual Core Processor (4M Cache, up to 3.90 GHz) - TDP: 15 W	
Memory	• 2x DDR4 2400 MHz 260-Pin SO-DIMM Socket • Support Un-buffered and Non-ECC Type up to 64 GB	
Graphics		
Graphics Engine	• Integrated Intel® UHD Graphics 620	
Maximum Display Output	• Supports Triple Independent Display (1x CDS, 1x VGA, 1x DisplayPort)	
VGA	• 1x VGA Connector (1920 x 1200 @60Hz)	
DP	• 1x DisplayPort Connector (4096 x 2304 @ 60Hz)	
Audio		
Audio Codec	• Realtek® ALC888, High Definition Audio	
Speaker-out	• 1x Speaker-out, Phone Jack 3.5mm	
Mic-in	• 1x Mic-in, Phone Jack 3.5mm	
I/O		
LAN	• 2x GbE LAN (Supports WoL, Teaming, Jumbo Frame & PXE), RJ45 - GbE1: Intel® I219LM - GbE2: Intel® I210	
USB	• 3x USB 3.2 Gen2 (Type A), 2x USB 2.0 (Type A)	
Serial Port	• 4x RS-232/422/485 with Auto Flow Control Support 5V/12V, DB9	
DIO	• 16x Isolated Digital I/O (8in/8out), 20-Pin Terminal Block	
Power Mode Switch	• 1x AT/ATX Mode Switch	
Power Switch	• 1x ATX Power On/Off Switch	
Reset Button	• 1x Reset Button	
Clear CMOS Switch	• 1x Clear CMOS Switch	
Remote Power On/Off	• 1x Remote Power On/Off Connector, 2-pin Terminal Block	
Power Ignition Sensing	• 1x Ignition DIP Switch (12V/24V, need to work with CFM module)	
Storage		
SSD/HDD	• 2x 2.5” HDD/SSD Drive Bay (SATA 3.0), Supports RAID 0/1	
Expansion		
Mini PCI Express	• 2x Full-size Mini-PCIe Sockets	

PCI Express		• 1x PCI or 1x PCIe x4 Expansion slot with Optional Riser Card * Support maximum dimension of add-on card (H x L): 111mm x 169mm
M.2 E Key Socket	• 1x M.2 2230 E Key Socket for Wireless Module, Supports Intel CRF Module	
SIM Socket	• 1 x Front Accessible SIM Socket	
Universal Bracket		• 2x Universal I/O Bracket
CFM (Control Function Module) Interface	• 2x Control Function Module (CFM) Interface	
CDS (Convertible Display System) Technology	• 1x Convertible Display System (CDS) Interface	
Antenna Holes	• 4x Antenna Holes	
Other Function		
Clear CMOS Switch	• 1 x Clear CMOS Switch	
Instant Reboot	• Support 0.2sec	
Watchdog Timer	• Software Programmable Supports 256 Levels System Reset	
Internal Speaker	• AMP 2W + 2W	
OSD Function	• LCD On/Off, Brightness Up, Brightness Down	
Power		
AT/ATX Power	• Support AT, ATX Mode	
Power Input	• 1x 3-pin Terminal Block Connector with Power Input 9-48VDC	
Power Adapter (Optional)	• 1x Optional AC/DC 12V/5A, 60W or 24V/5A 120W	
Physical		
Dimension (W x D x H)	• 254.5 x 190 x 41.5mm	• 254.5 x 190 x 61 mm
Weight Information	• 2.2 kg	• 2.7 kg
Mechanical Construction	• Extruded Aluminum with Heavy Duty Metal	
Mounting	• Wall / VESA / CDS / DIN Rail	
Physical Design	• Fanless Design • Jumper-less Design	
Reliability & Protection		
Reverse Power Input	• Yes	
Over Voltage Protection	• Protection Range: 51-58V • Protection Type: shut down operating voltage, • re-power on at the present level to recover	
Over Current Protection	• 15A	
CMOS Battery Backup	• SuperCap Integrated for CMOS Battery Maintenance-free Operation	
MTBF	• 231,243 hours	

Operating System		
Microsoft® Windows®	• Windows®10	
Linux	• Supports by project	
Environment		
Operating Temperature	• Ambient with Air Flow: -40°C to 70°C (with Extended Temperature Peripherals)	
Storage Temperature	• -40°C to 70°C	
Relative humidity	• 95% RH @ 70°C (Non-condensing)	
Shock	• Operating, 50 Grms, Half-sine 11 ms Duration (w/ SSD, according to IEC60068-2-27)	
Vibration	• Operating, 5 Grms, 5-500 Hz, 3 Axes (w/ SSD, according to IEC60068-2-64)	• Operating, 5 Grms, 5-500 Hz, 3 Axes (w/ SSD, according to IEC60068-2-64) • Operating, 1 Grms, 10-500 Hz, 3 Axes (w/ CV-W124 only, according to IEC60068-2-6)
Safety	• UL, cUL, CB, IEC/EN62368-1	
Fire Protection	• EN45545-2	

** Product Specifications and features are for reference only and are subject to change without prior notice. For more information, please refer to the latest product datasheet from Cincoze's website.*

Dimension

CS-W124C/P2102 **Unit: mm**

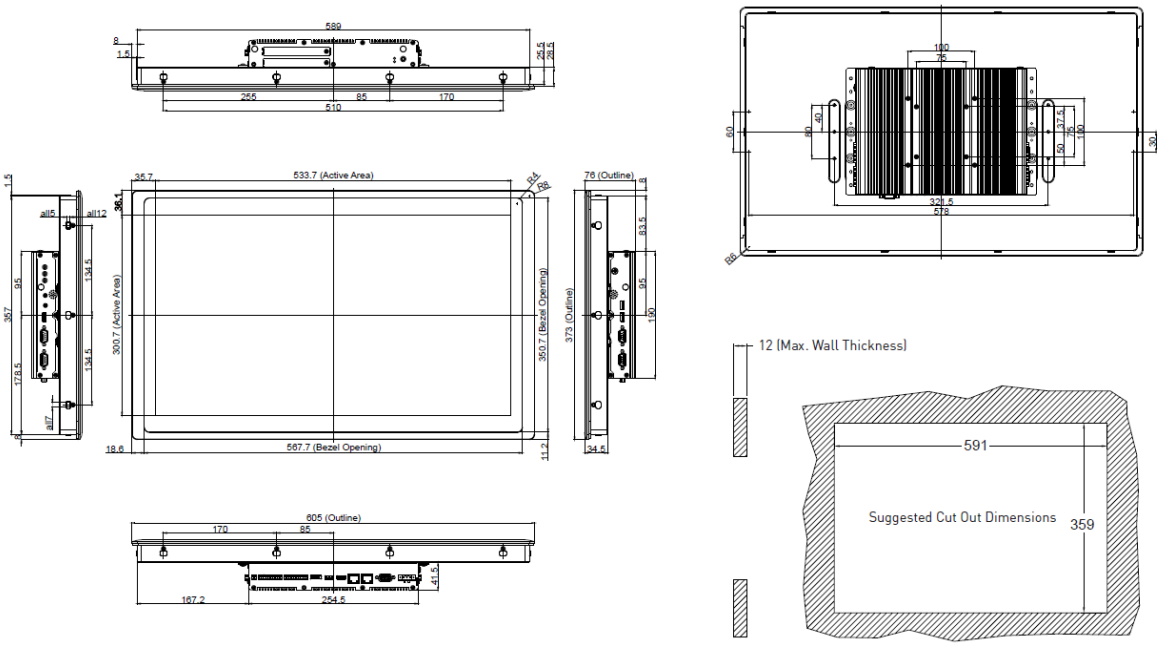

CS-W124C/P2102E **Unit: mm**

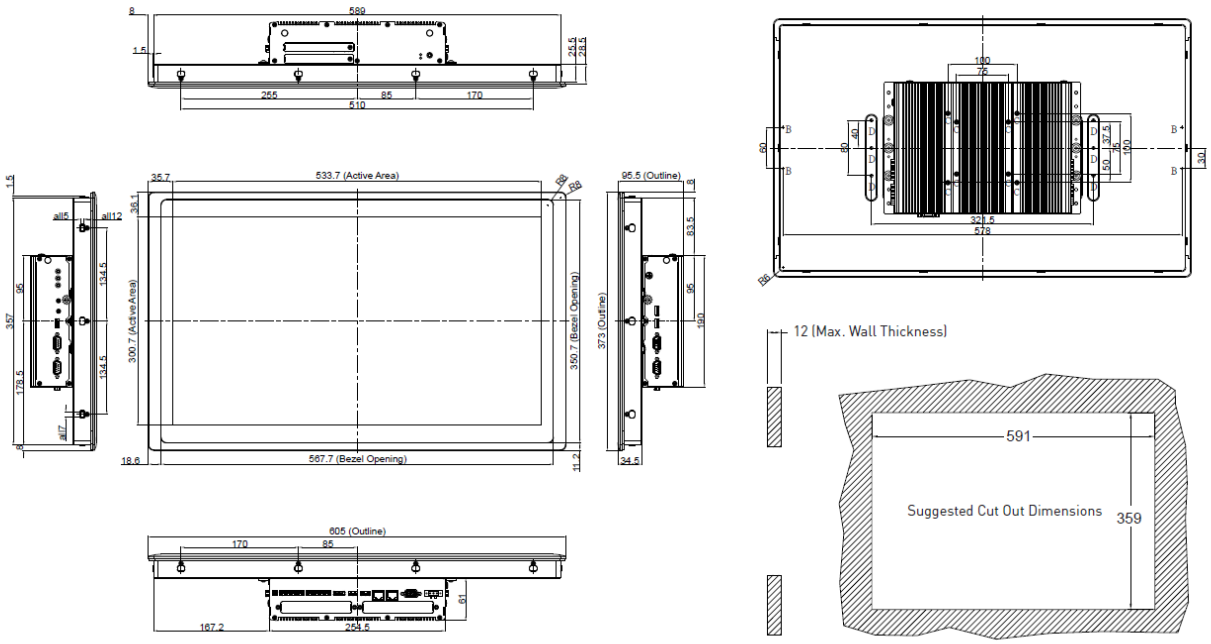

1.5 System I/O

1.5.1 Front

Antenna Hole

Used to connect an antenna for optional wireless module

SIM Card

Used to insert a SIM card

IGN Switch

Used to set up IGN function

Reset Button

Used to reset the system

AT/ATX Switch

Used to select AT or ATX power mode

Clear CMOS

Used to clear CMOS to reset BIOS

Removable HDD

Used to insert a 2.5” SATA HDD/SSD

Power LED

Indicates the power status of the system

HDD LED

Indicates the status of the hard drive

Power On/Off Switch

Power-on or power-off the system

CS-100/P2102

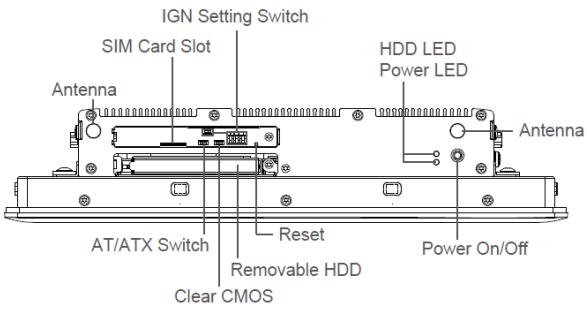

CS-100/P2102E

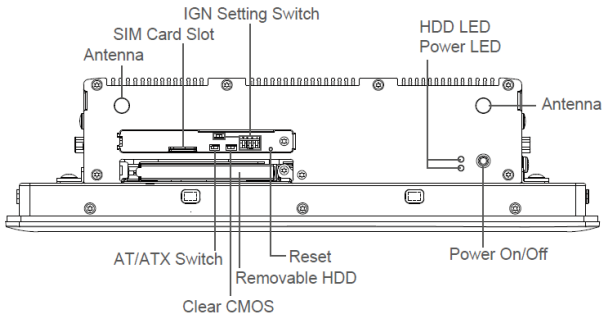

1.5.2 Rear

DC IN

Used to plug a DC power input with terminal block

VGA

Used to connect to a monitor with analog signal interface

LAN

Used to connect to local area network

USB3.2 Gen2

Used to connect to USB 3.2 Gen2/3.2 Gen1/2.0/1.1 compatible devices

Display Port

Used to connect a monitor with DisplayPort interface

Digital I/O Terminal Block

The Digital I/O terminal block supports 16 isolated DIO (8 digital input and 8 digital output)

Remote Power On/Off Terminal Block

Used to connect to remote power on/off switch

Universal I/O Bracket (For P2102E)

Used to expand I/O for Mini-PCIe module or PCI(e) card

CS-100/P2102

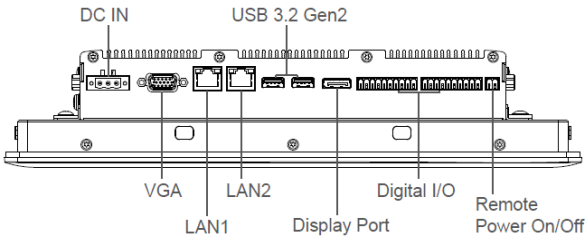

CS-100/P2102E

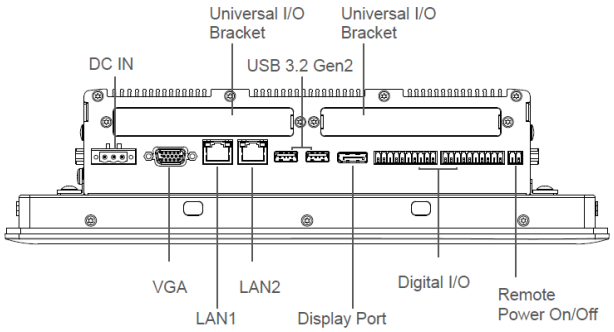

1.5.3 Left

Antenna Hole

Used to connect an antenna for optional wireless WIFI module

USB 2.0

Used to connect to USB 2.0/1.1 compatible devices

COM Port

Used to connect to RS-232/422/485 serial devices

CS-100/P2102

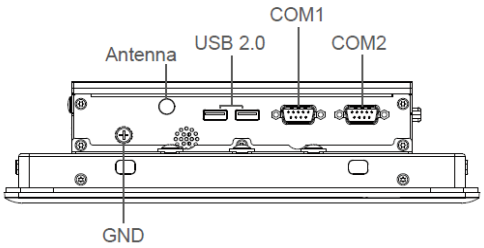

CS-100/P2102E

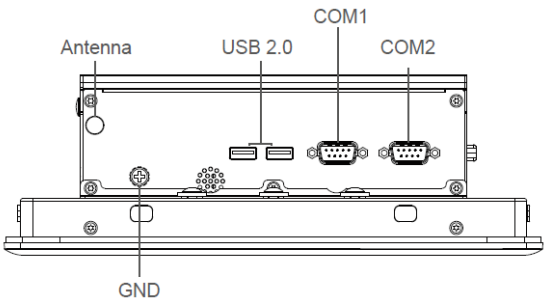

1.5.4 Right

COM Port

Used to connect to RS-232/422/485 serial devices

USB 2.0

Used to connect to USB 2.0/1.1 compatible devices

Line-Out

Used to connect a speaker

Mic-In

Used to connect a microphone

OSD Function (For CDS Display Module)

- **LCD On/Off**

  Press to turn-on or turn-off the backlight of display
- **Increase Brightness**

  Press to increase brightness of the screen
- **Decrease Brightness**

  Press to decrease brightness of the screen

CS-100/P2102

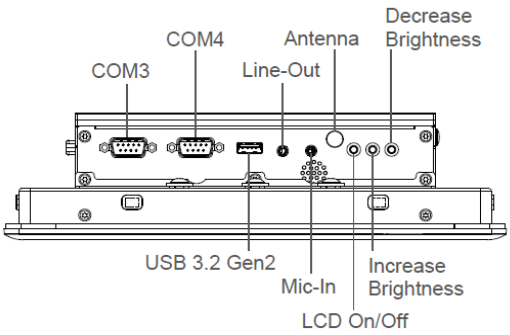

CS-100/P2102E

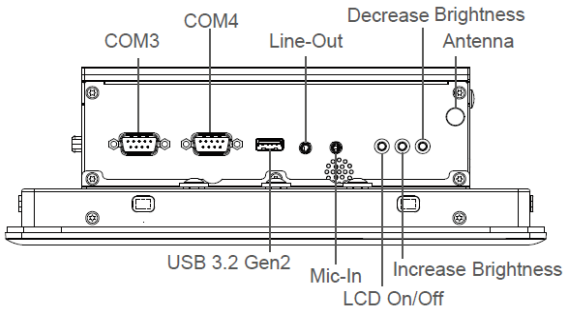

1.5.5 Top

VESA Mounting Hole

These are mounting holes for VESA mount (75x75mm and 100x100mm)

CS-100/P2102

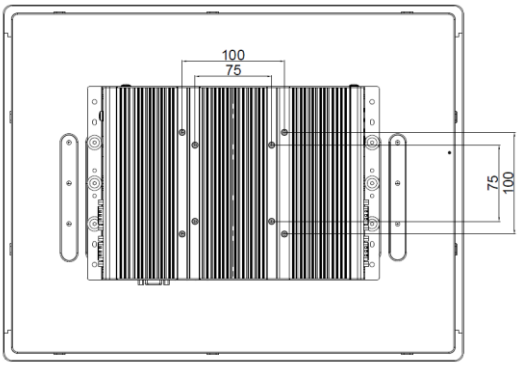

CS-100/P2102E

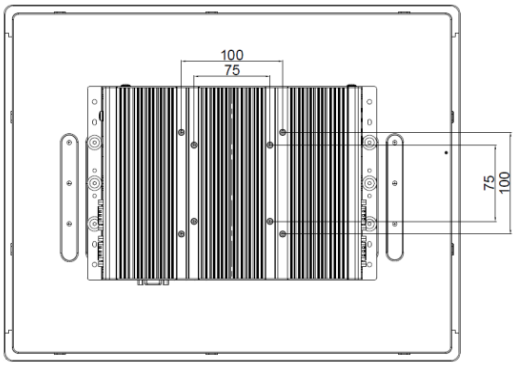

Chapter 2
Switches & Connectors

2.1 Location of Switches and Connectors

2.1.1 Top View

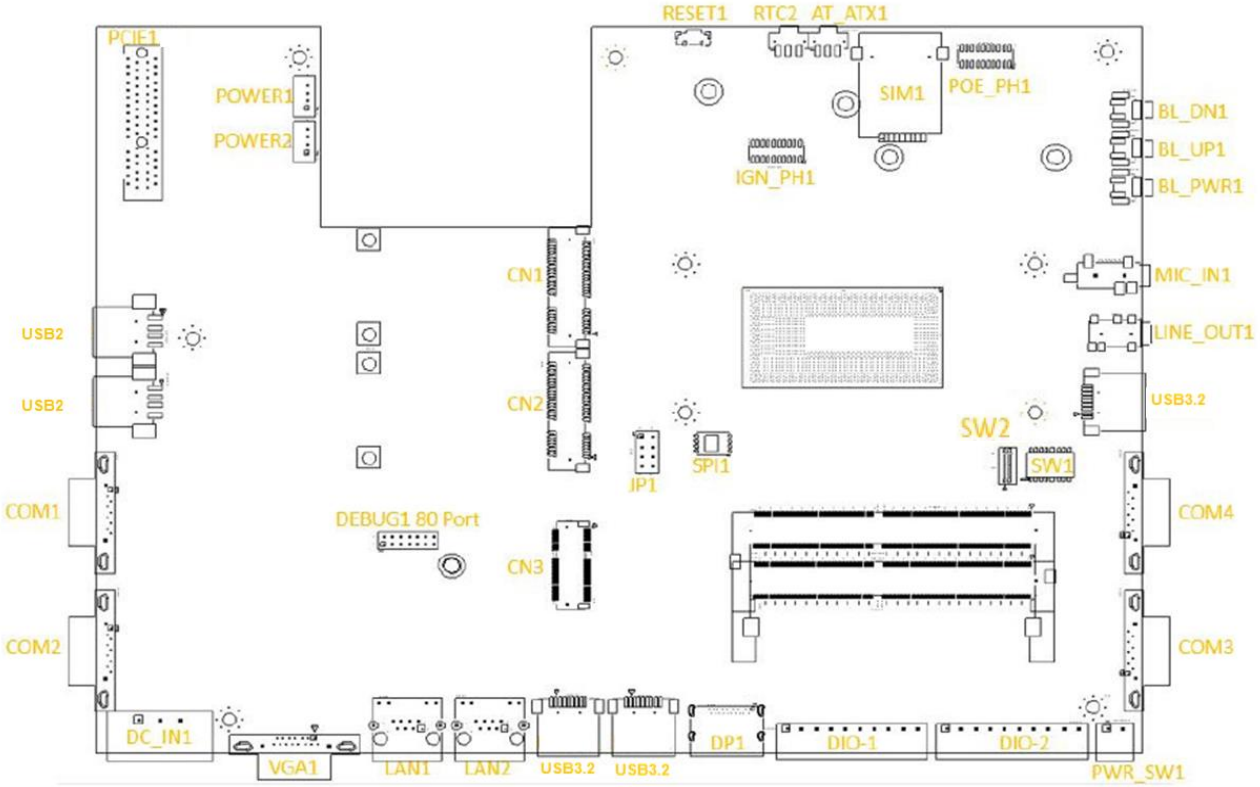

2.1.2 Bottom View

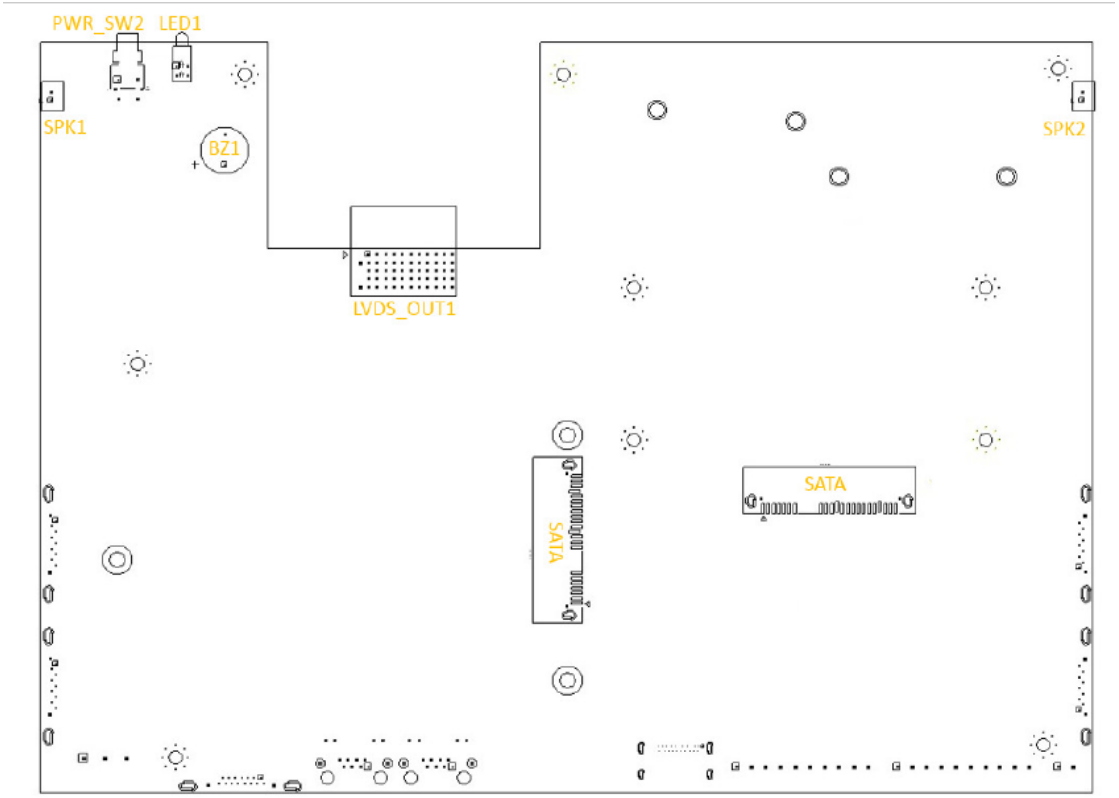

2.2 Switches and Connectors Definition

List of Switch

Location	Definition
AT_ATX1	AT / ATX Power Mode Switch
BL_PWR1	Backlight Power on / off switching
BL_UP1	Backlight Increase
BL_DN1	Backlight Decrease
LED1	HDD / Power Access LED Status
PWR_SW2	Power button
RTC2	Clear COMS Switch
Reset1	Reset Switch
SW1	COM1~4 with Power Select
SW2	Super CAP Switch

List of Connector

Location	Definition
COM1, COM2, COM3, COM4	RS232 / RS422 / RS485 Connector
CN1	Mini PCI-Express Socket (mPCIE/ SIM Module / USB3)
CN2	Mini PCI-Express Socket (mPCIE/ USB3)
CN3	M.2 Key E Socket (M.2 PCIE / Intel CNVi)
DC_IN1	3-pin DC 9V~48V Power Input Connector
DIO-1/DIO-2	Digital output/input define setting
DP1	Display Port
LAN1, LAN2	LAN Port
LINE_OUT1	Line-out Jack
MIC_IN1	Mic-in Jack
PCIE1	PCIE Connector
POWER1, POWER2	+5V/ +12V Power Output
PWR_SW1	Remote Power On/Off Switch Connector
SATA1, SATA2	SATA with Power Connector
SIM1	SIM Card Socket
SPK1, SPK2	Internal Speaker Connector
USB2	USB 2.0 Port
USB3.2	USB 3.2 Port
VGA1	VGA Connector

2.3 Definition of Switches

AT_ATX1: AT / ATX Power Mode Switch

Switch	Definition
1-2 (Left)	AT Power Mode
2-3 (Right)	ATX Power Mode (Default)

BL_PWR1: Backlight Power on / off

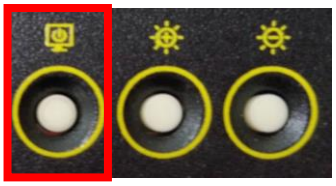

Switch	Definition
Push	Backlight Power on / off switching

BL_UP1: Backlight Increase

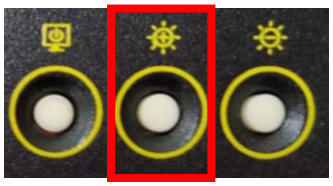

Switch	Definition
Push	Backlight Increase

BL_DN1: Backlight Decrease

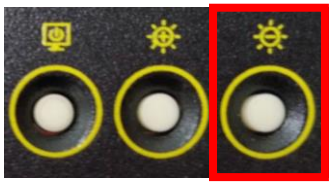

Switch	Definition
Push	Backlight **Decrease**

LED1: HDD / Power Access LED Status

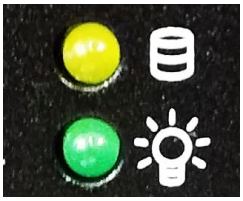

LED Type	Status	LED Color
HDD LED	HDD Read/Write	Yellow
	No Operation	Colorless
POWER LED	POWER ON	Green
	POWER OFF	Colorless
	Stand by	Blinking Green

PWR_SW2: System Power Button

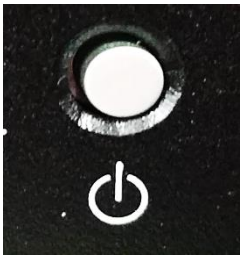

Switch	Definition
Push	Power System

RTC2：Clear CMOS Switch

Switch	Definition
1-2 (Left)	No Operation (Default)
2-3 (Right)	Clear CMOS

RESET1: Reset Switch

Switch	Definition
Push	Reset System

SW1: COM1~4 with Power Select Switch

Location	Function		DIP1	DIP2
SW1	COM1	RI	ON (Default)	ON (Default)
		5V	ON	OFF
		12V	OFF	OFF

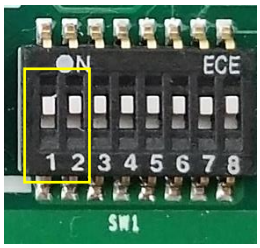

Location	Function		DIP3	DIP4
SW1	COM2	RI	ON (Default)	ON (Default)
		5V	ON	OFF
		12V	OFF	OFF

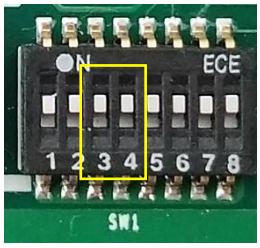

Location	Function		DIP5	DIP6
SW1	COM3	RI	ON (Default)	ON (Default)
		5V	ON	OFF
		12V	OFF	OFF

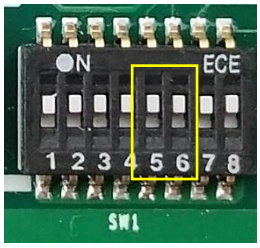

Location	Function		DIP7	DIP8
SW1	COM4	RI	ON (Default)	ON (Default)
		5V	ON	OFF
		12V	OFF	OFF

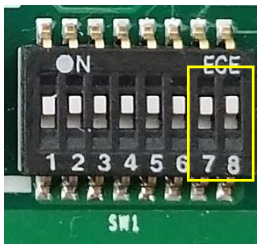

SW2: Super CAP Switch

Location	Function	DIP1	DIP2
SW2	Super CAP Enabled	ON (Default)	ON (Default)
	Super CAP Disabled	OFF	

ON

OFF

2.4 Definition of Connectors

COM1 / COM2 / COM3/ COM4: RS232 / RS422 / RS485 Connector

Connector Type: 9-pin D-Sub

Pin	RS232 Definition	RS422 / 485 Full Duplex Definition	RS485 Half Duplex Definition
1	DCD	TX-	DATA -
2	RXD	TX+	DATA +
3	TXD	RX+	
4	DTR	RX-	
5	GND		
6	DSR		
7	RTS		
8	CTS		
9	RI		

CN1： Mini PCI-Express Socket (Support mPCIE & SIM Module & USB)

PIN	Definition	PIN	Definition
1	WAKE#	27	GND
2	3.3V	28	+1.5V
3	NA	29	GND
4	GND	30	SMB_CLK
5	NA	31	PETN0(USB3TN0)/SATATN0
6	1.5V	32	SMB_DATA
7	CLKREQ#	33	PETP0(USB3TP0)/SATATP0
8	SIM_VCC	34	GND
9	GND	35	GND
10	SIM_DATA	36	USB_D-
11	REFCLK-	37	RESERVED
12	SIM_CLK	38	USB_D+
13	REFCLK+	39	RESERVED
14	SIM_Reset	40	GND
15	GND	41	3.3V
16	SIM_VPP	42	NA
17	NA	43	GND
18	GND	44	NA
19	NA	45	NA
20	3.3V	46	NA
21	GND	47	NA
22	PERST#	48	+1.5V
23	PERN0(USB3RN0)/SATARP0	49	NA
24	3.3V	50	GND
25	PERP0(USB3RP0)/SATARN0	51	NA
26	GND	52	+3.3V

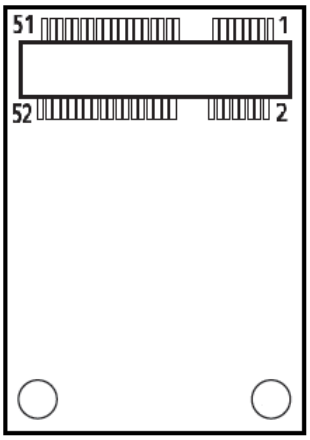

CN2： Mini PCI-Express Socket (Support mPCIE & USB)

PIN	Definition	PIN	Definition
1	WAKE#	27	GND
2	3.3V	28	+1.5V
3	NA	29	GND
4	GND	30	SMB_CLK
5	NA	31	PETN0/SATATN0
6	1.5V	32	SMB_DATA
7	CLKREQ#	33	PETP0/SATATP0
8	NA	34	GND
9	GND	35	GND
10	NA	36	USB_D-
11	REFCLK-	37	GND
12	NA	38	USB_D+
13	REFCLK+	39	3.3V
14	NA	40	GND
15	GND	41	3.3V
16	NA	42	NA
17	NA	43	GND
18	GND	44	NA
19	NA	45	NA
20	3.3V	46	NA
21	GND	47	NA
22	PERST#	48	+1.5V
23	PERN0/SATARP0	49	NA
24	+3.3VAUX	50	GND
25	PERP0/SATARN0	51	NA
26	GND	52	+3.3V

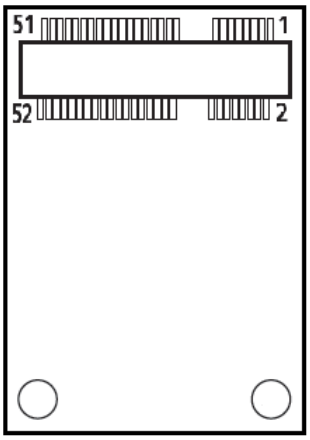

CN3： M.2 Key E Socket (Support M.2 PCIE / Intel CNVi)

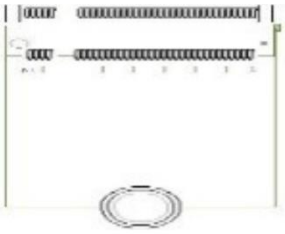

Pin	Definition	Pin	Definition	Pin	Definition
1	GND	27	KEY	53	NC
2	+3.3V	28	KEY	54	PULL-UP
3	USB_D+	29	KEY	55	PEWAKE0#
4	+3.3V	30	KEY	56	NC
5	USB_D-	31	KEY	57	GND
6	NC	32	RGI_DT	58	I2C_DATA
7	GND	33	GND	59	WTD1N/PETP1
8	PCM_CLK	34	RGI_RSP	60	I2C_CLK
9	WGR_D1N	35	PETP0	61	WTD1P/PETN1
10	PCM_SYNC/LPCRSTN	36	RBI_DT	62	NC
11	WGR_D1N	37	PETN0	63	GND
12	PCM_IN	38	CLINK_REST	64	REF_CLK
13	GND	39	GND	65	WTD0N/PETP1
14	PCM_OUT	40	CLINK_DATA	66	NC
15	WGR_D0N	41	PERP0	67	WTD0P/PERN1
16	NC	42	CLINK_CLK	68	NC
17	WGR_D0P	43	PERN0	69	GND
18	GND	44	COEX3	70	PEWAKE1#
19	GND	45	GND	71	WTCLK/REFCLKP1
20	UART_WAKE	46	COEX_TXD	72	+3.3V
21	WGR_CLKN	47	REFCLKP0	73	WTCLK/REFCLKN1
22	BRI_RSP	48	COEX_RXD	74	+3.3V
23	WGR_CLKP	49	REFCLKN0	75	GND
24	KEY	50	SUSCLK		
25	KEY	51	GND		
26	KEY	52	PERST0#		

DC_IN1: DC Power Input Connector (+9~48V)

Connector Type: Terminal Block 1X3 3-pin, 5.0mm pitch

Pin	Definition
1	+9~48VIN
2	Ignition (IGN)
3	GND

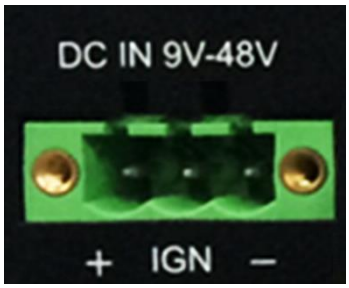

CAUTION

Please disconnect the power source before mounting the DC power cables or connecting the DC power connector to system.

LAN1 / LAN2 LED： LAN1 / 2 LED Status Definition

LAN LED	Status	Definition
Act LED	Blinking Yellow	Data Activity
	Off	No Activity
Link LED	Steady Green	1Gbps Network Link
	Steady Orange	100Mbps Network Link
	Off	10Mbps Network Link

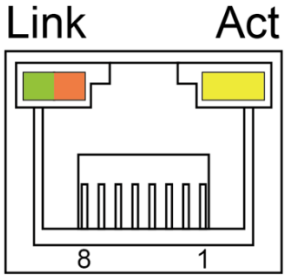

POWER1 / POWER2: Power Connector

Connector Type: 1x4 4-pin Wafer, 2.0mm pitch

Pin	Definition
1	+5V
2	GND
3	GND
4	+12V

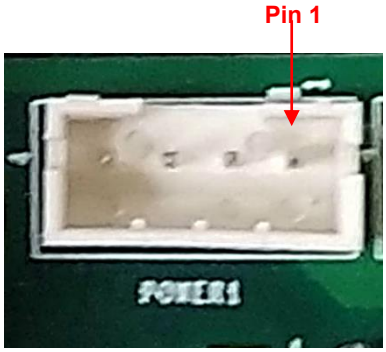

PWR_SW1: Remote Power On/Off Switch Connector

Connector Type: Terminal Block 1X2 2-pin, 3.5mm pitch

Pin	Definition
1	GND
2	PWR_SW

WARNING

Do not apply power to this connector!
This port is used to connect a SWITCH!

Chapter 3
System Setup

This chapter takes P2102 as an example to demonstrate the installation of hardware components, except for chapter 3.7.

3.1 Removing Top Cover

WARNING (AVERTIR)

In order to prevent electric shock or system damage, must turn off power and disconnect the unit from power source before removing the chassis cover.

(Afin d'éviter tout risque d'électrocution ou d'endommagement du système, vous devez couper l'alimentation et débrancher l'appareil de la source d'alimentation avant de retirer le couvercle du châssis.)

1. Loosen the eight screws at front and rear panel.

2. Raise the edge of top cover (1), and raise the other side (2) subsequently to remove it from the chassis.

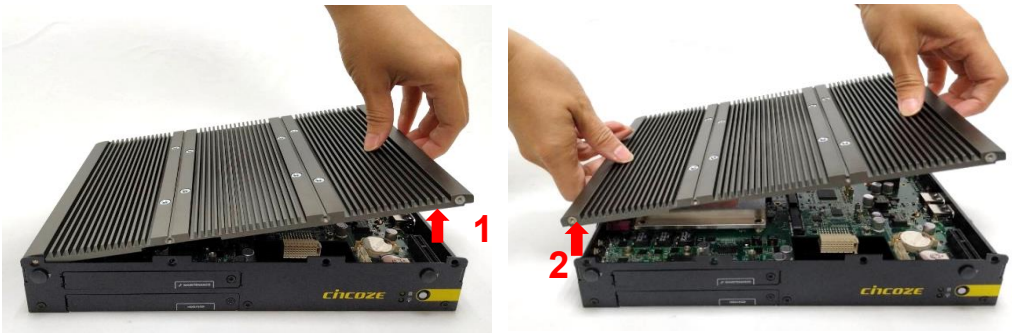

3. Place the top cover aside gently.

3.2 Installing Half Size Mini PCIe Card

1. Locate the Mini PCIe socket on the system board.

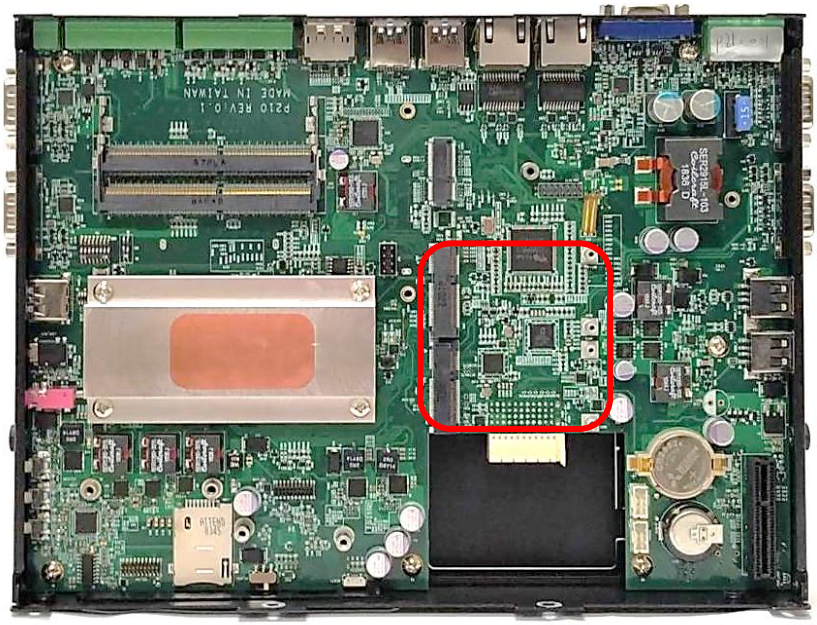

2. Use two screws provided on adapter bracket to fasten the card and bracket together.

3. Tilt the Mini PCIe card at a 45-degree angle and insert it into the socket until the golden finger connector of the card seated firmly.

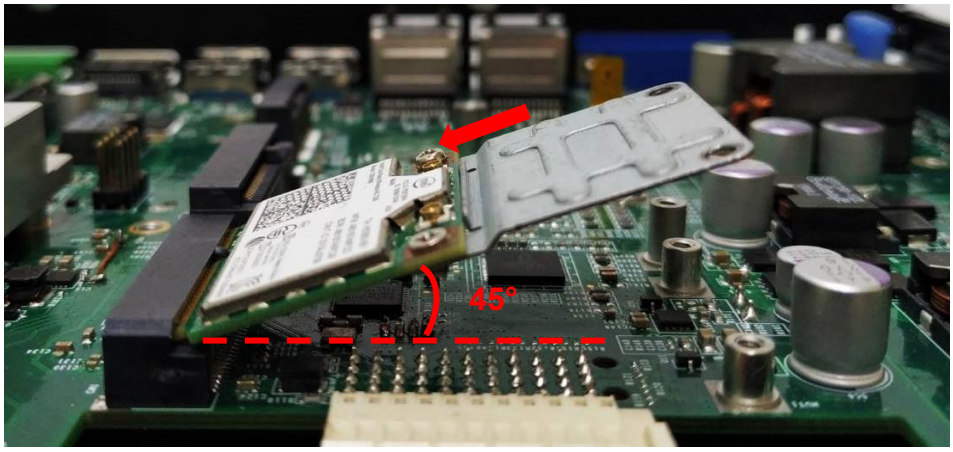

4. Press down the card and secure it with two screws.

3.3 Installing Full Size Mini PCIe Card

1. Locate the Mini PCIe slot on the system board.

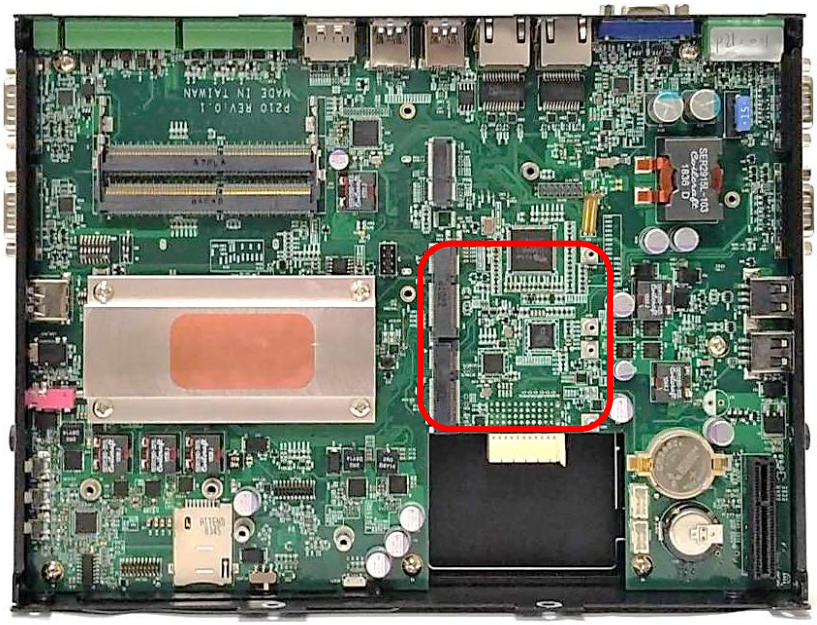

2. Tilt the Mini PCIe card at a 45-degree angle and insert it to the socket until the golden finger connector of the card seated firmly.

3. Press the card down and secure it with 2 screws.

3.4 Installing M.2 E Key Card

1. Locate the M.2 E Key slot on the system board.

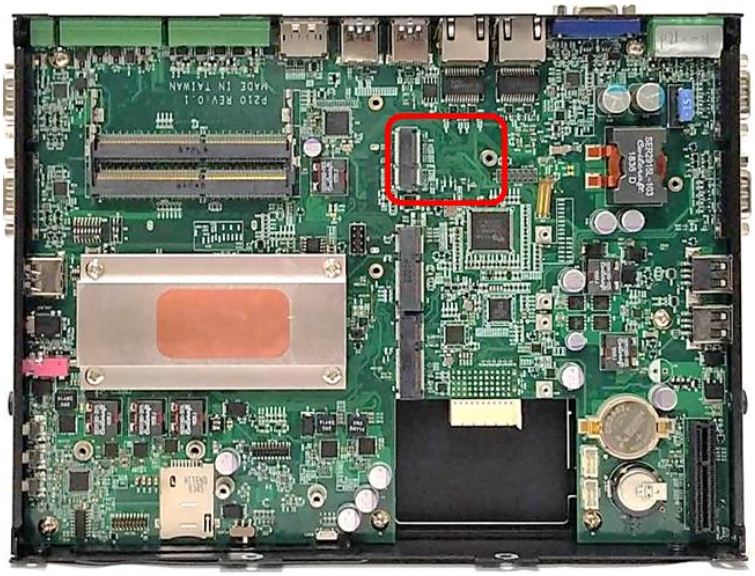

2. Tilt the M.2 E Key card at a 45-degree angle and insert it to the socket until the golden finger connector of the card seated firmly.

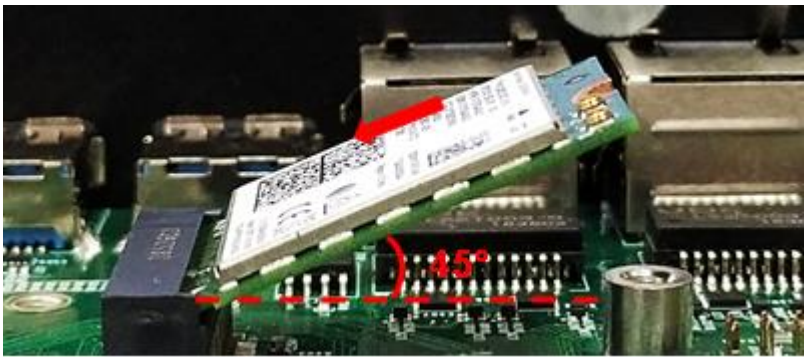

3. Press the card down and secure it with 1 screw.

3.5 Installing Antenna(s)

1. Remove the antenna rubber cover on front, left or right panel.

2. Penetrate the antenna jack through the hole.

3. Put on the washer and fasten the nut with antenna jack.

4. Assemble the antenna and antenna jack together.

5. Attach the RF connector at another end of the cable onto the card.

3.6 Installing SO-DIMM Memory

1. Locate the SO-DIMM socket on the system board.

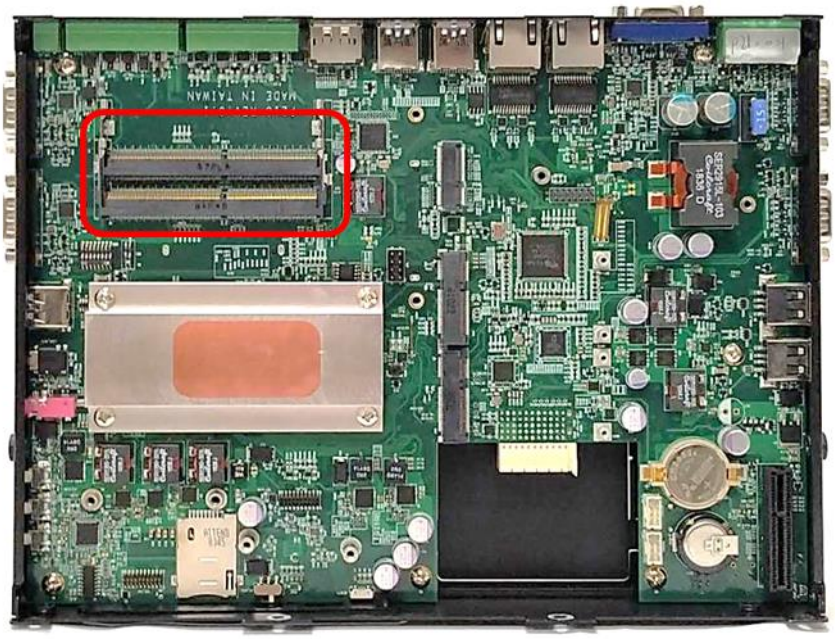

2. Tilt the memory module at a 45-degree angle, and insert it into SO-DIMM socket until the golden finger connector of the module is seated firmly.

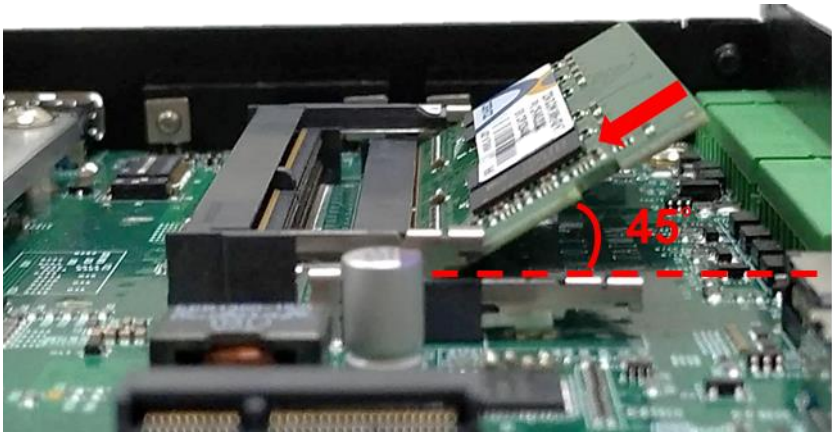

3. Press down the memory module until retaining clips snap back in place.

4. For the upper SO-DIMM socket, please follow the same steps described earlier to install.

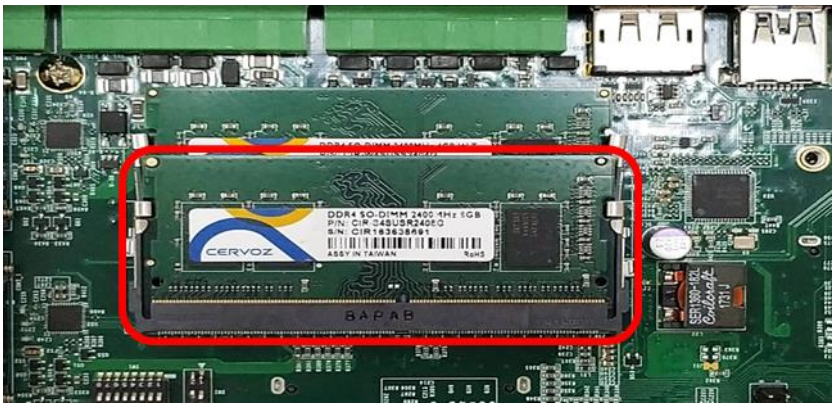

3.7 Installing PCI(e) Card

This chapter takes P2102E for example to demonstrate the installation steps.

1. Loosen the two screws as indicated at rear panel.

2. Attach the PCI / PCIe Card Installation Kit on, and fasten the two screws back on rear panel to fix the Kit.

3. Loosen the screw as indicated to remove the PCI bracket.

4. Align the notch of golden fingers of Riser card(Optional) with the slot. Insert the card vertically, and press the card straight down into the slot until it's seated firmly.

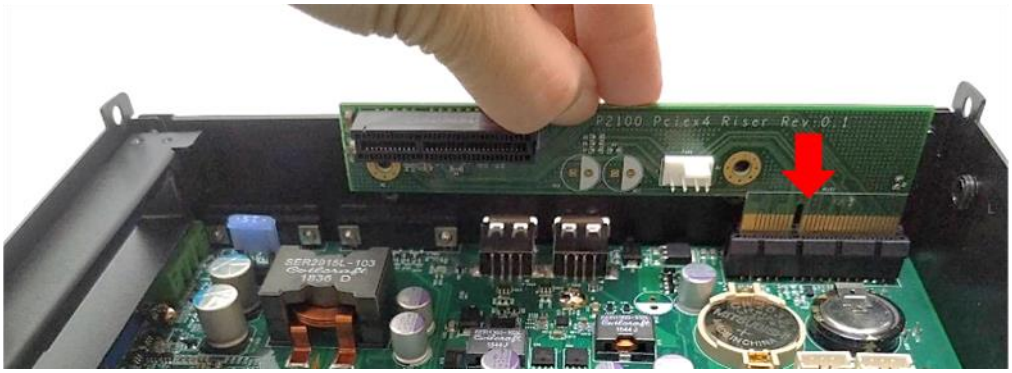

5. Align the notch of golden fingers of PCI(e) card with the expansion slot. Insert the card horizontally, and press the card straight down into the slot until it's seated firmly.

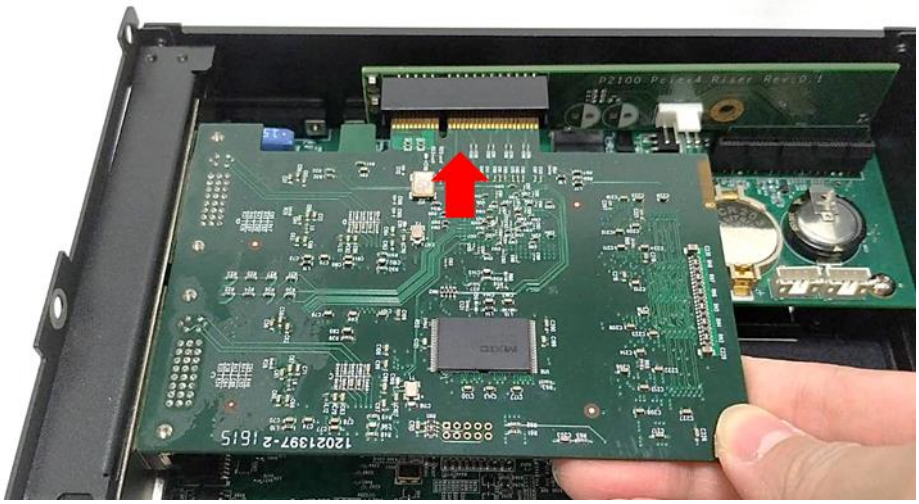

6. Fasten the screw back to secure the PCI(e) expansion card.

7. Locate the retention module of PCI(e) expansion card.

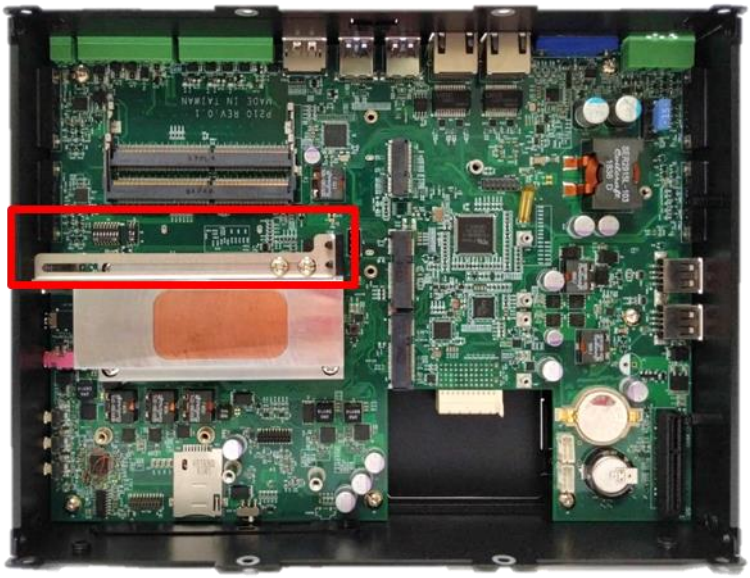

8. Loosen the two screw as indicated to have the clamp arm slidable.

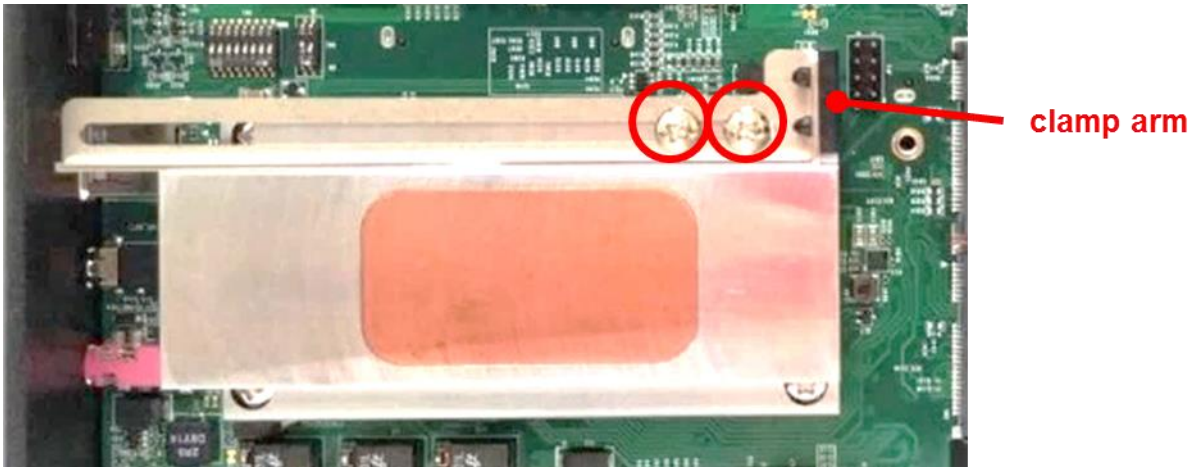

9. Slide the clamp arm of retention module until it contacts the edge of PCI(e) expansion card.

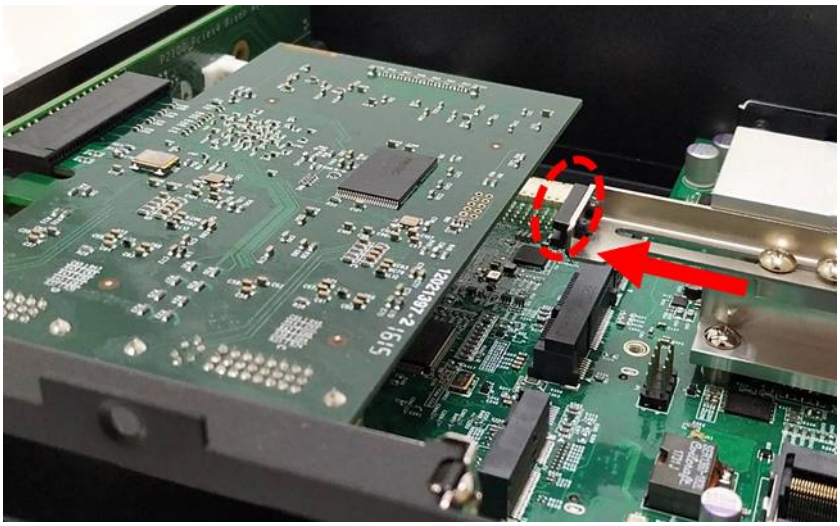

10. Finally, fasten the two screws that were previously loosen halfway to fix the retention module.

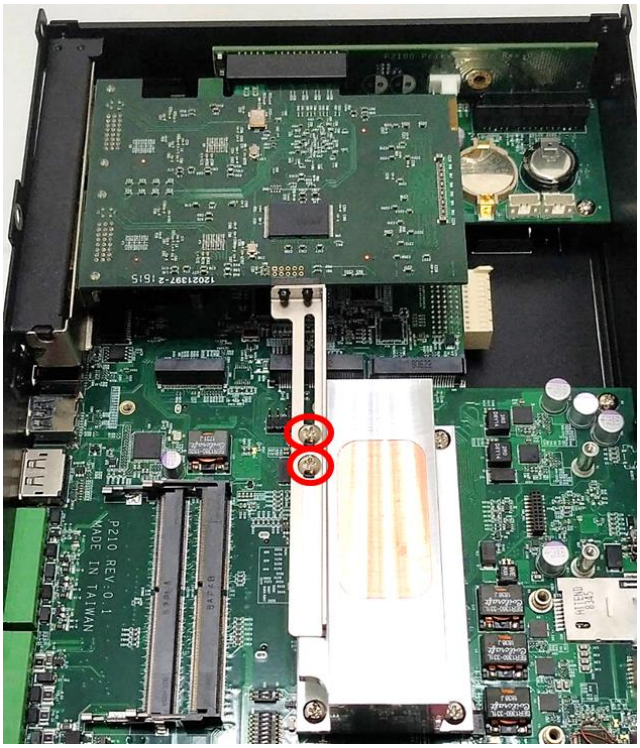

3.8 Installing Thermal Pad of Thermal Block

1. Place thermal pad on the top of CPU thermal block in order to provide a seamless contact with the body of chassis to create an efficient heat dissipation.

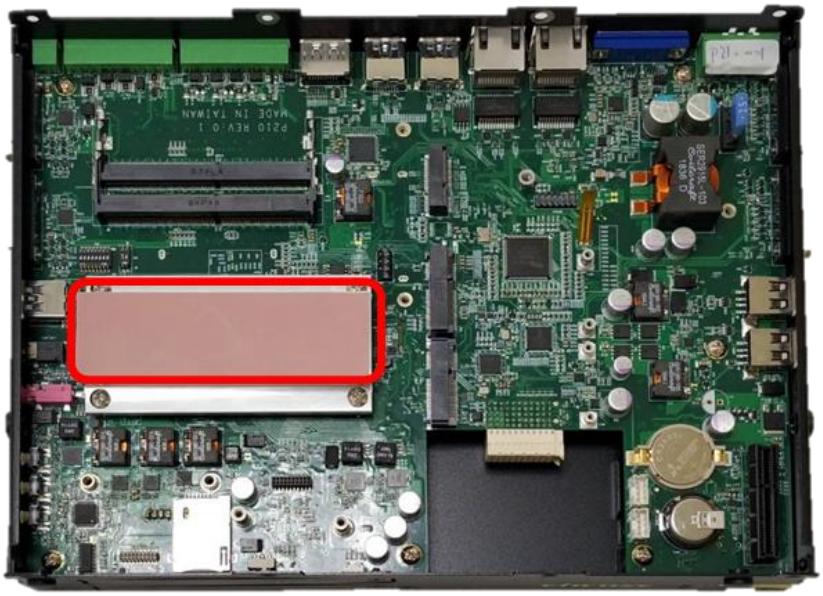

CAUTION

Before assembling the system's chassis cover, please make sure the protective film on the Thermal Pad has been removed!

3.9 Installing Top Cover

1. Put on the edge of top cover onto system, and the other side subsequently.

2. Fasten the eight screws at front and rear panel to secure the top cover.

3.10 Installing SATA Hard Drive at Front Panel

1. Turn over the system to bottom side, and remove the screw.

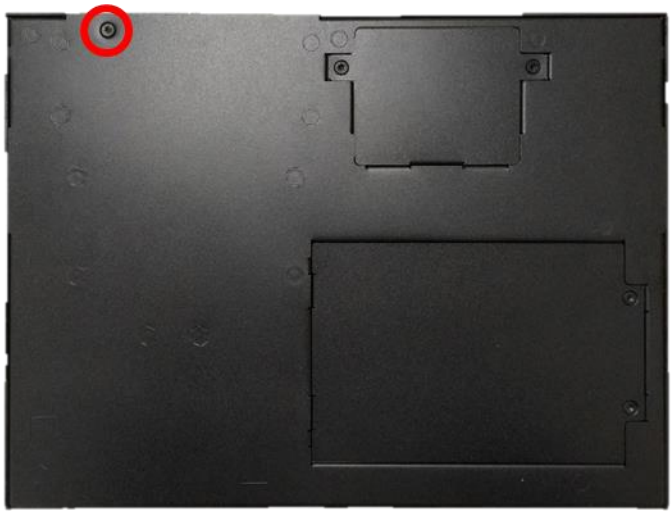

2. Loosen the screw to remove the HDD bay cover bracket.

3. Pull the rotating arm of HDD bracket outward as indicated.

4. Hold the rotating arm to pull out the HDD bracket.

5. Place the HDD bracket on screw-hole side of HDD. Use four screws provided to assemble HDD on the bracket.

6. Align the HDD bracket with the entrance of HDD bay. And insert the HDD bracket and push it until the edge connector of HDD fully inserted into SATA slot.

7. Put back HDD bay cover at front panel, and fasten it with the screw.

8. Fasten the screw to secure the HDD bracket on the system chassis.

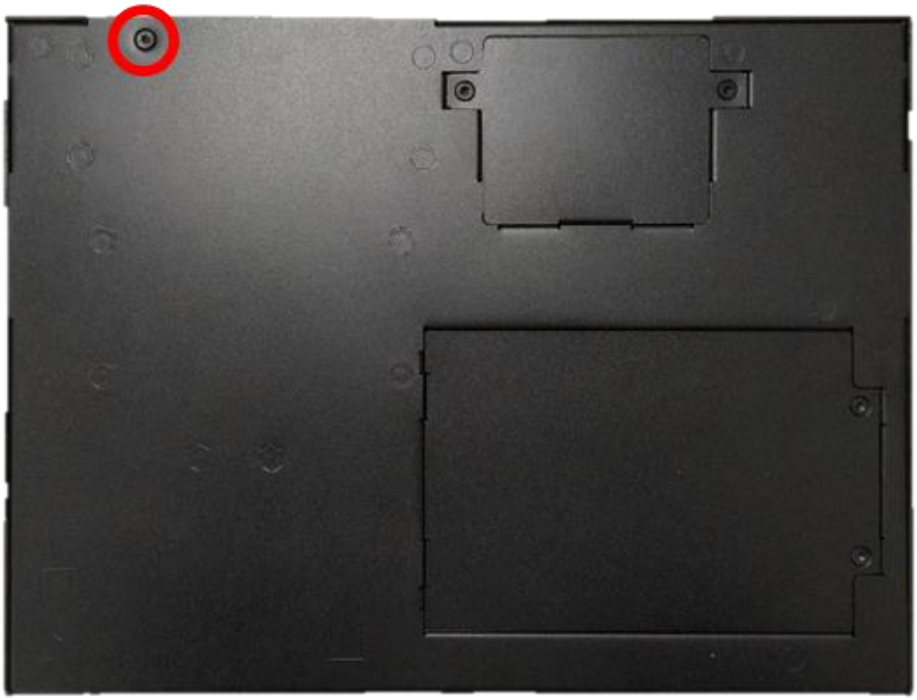

3.11 Installing SATA hard drive on Bottom Side

1. Turn over the system to bottom side. Locate the cover of HDD compartment.

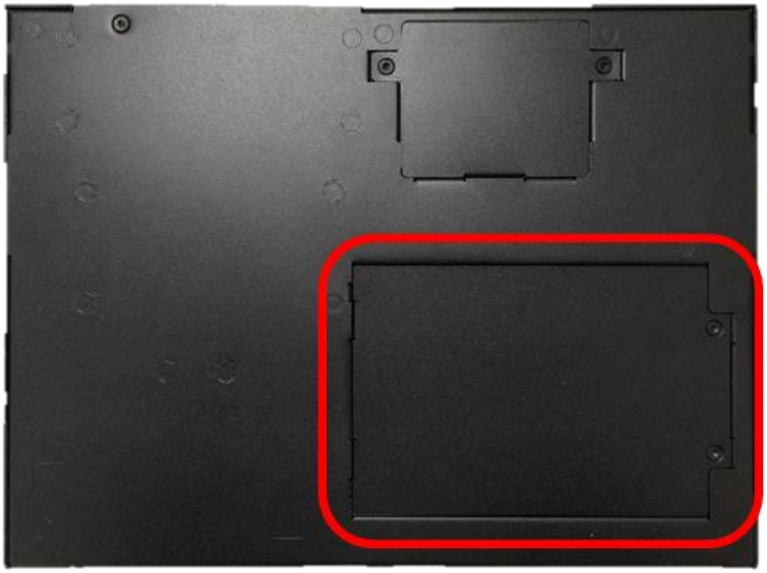

2. Loosen the two screws, lift the cover, and then remove it.

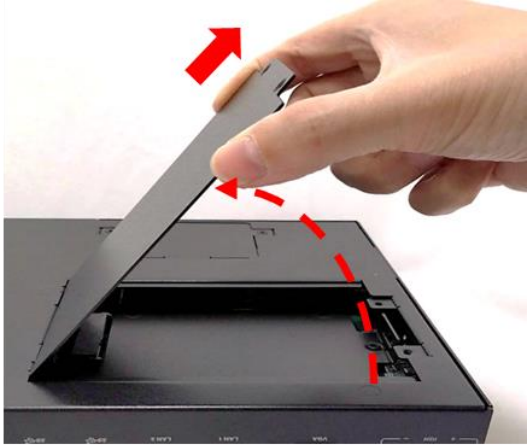

3. Loosen three screws and take the HDD bracket out of HDD compartment.

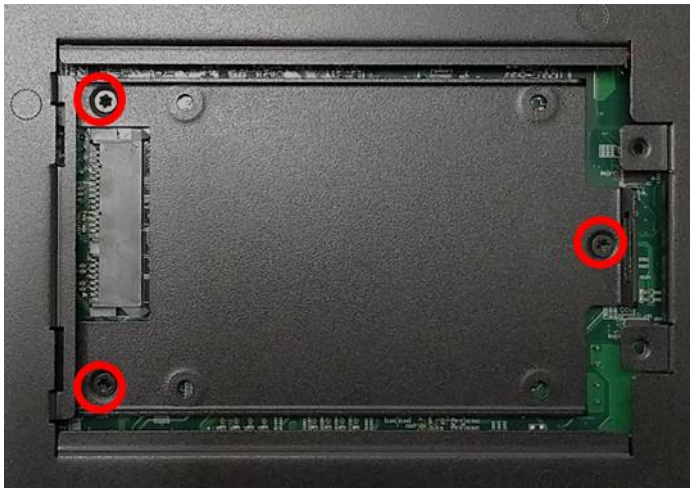

4. Place the HDD bracket on screw-hole side of HDD. Use four screws provided to assemble HDD on the bracket.

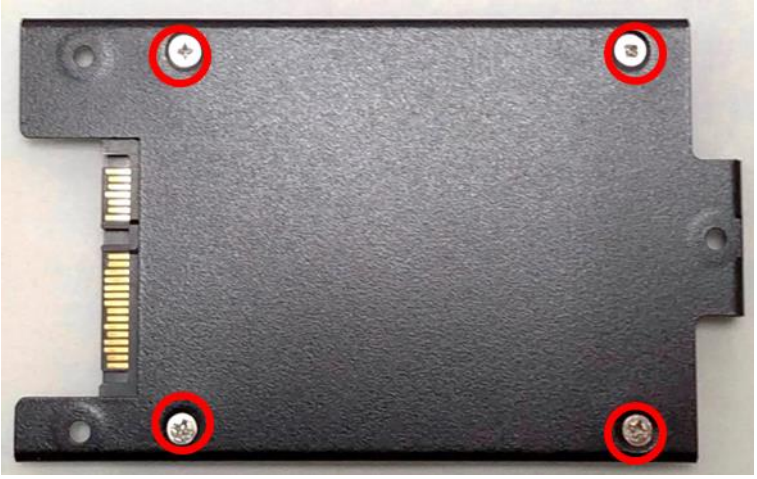

5. Seat the HDD bracket into HDD compartment, and line up the connector of HDD with SATA slot, then push it until HDD is fully connected into slot.

6. Secure the HDD bracket with three screws.

7. Put back the cover and fasten the two screws.

3.12 Installing SIM Card

1. Loosen the screw to remove the Maintenance cover bracket.

2. Locate the SIM card slot.

3. Insert the SIM card.

3.13 Connecting with CS Display Module

1. Prepare the mounting kit that accompanied with P2102 as shown. (including two mounting brackets and one screw pack)

2. Remove the six screws at left and right panel.

3. Assemble two mounting brackets by fastening six screws from the screws pack.

4. Turn over the system to bottom side. Locate the connector cover of display module.

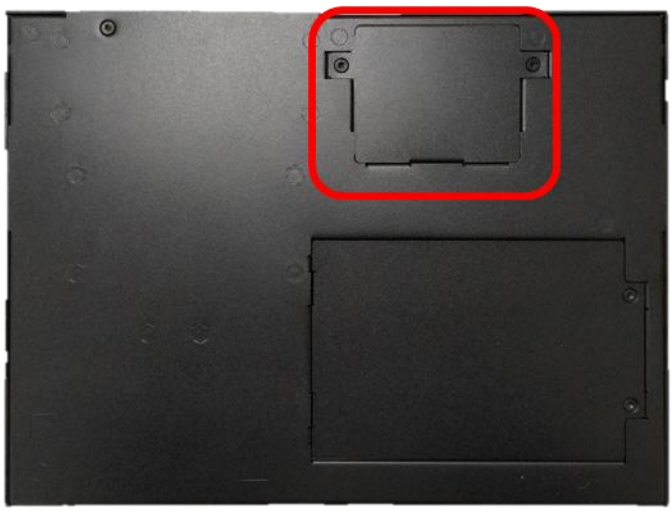

5. Loosen two screws to remove the cover.

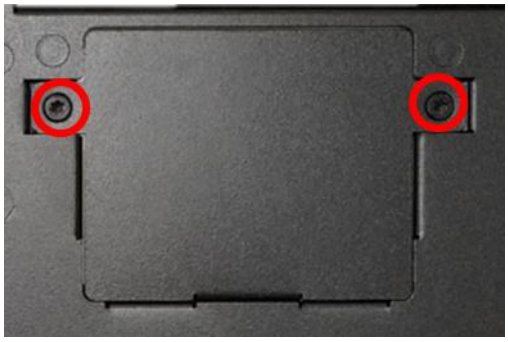

The following photos indicates the male connector (on display module) and female connector (on P2102).

6. Place the P2102 on the display module through its display connector hole as indicated.

7. Align the mounting holes of P2102 with the screw holes of display module underneath. Then slide the PC2100 carefully as indicated to have P2102 and display module connected together.

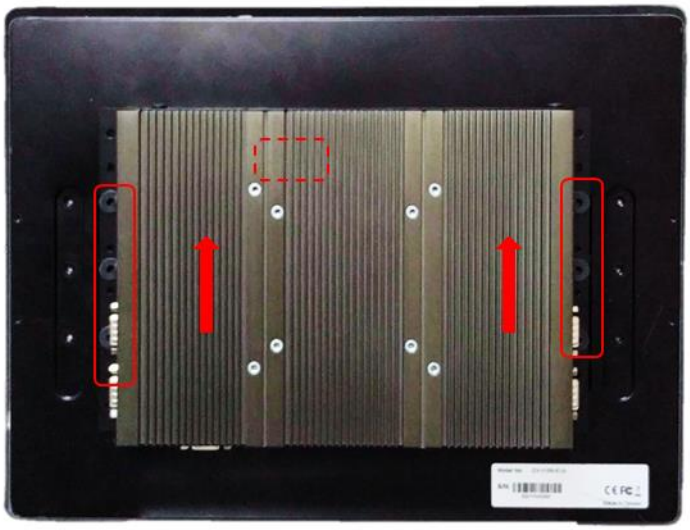

8. Fasten six screws to secure P2102 on the display module.

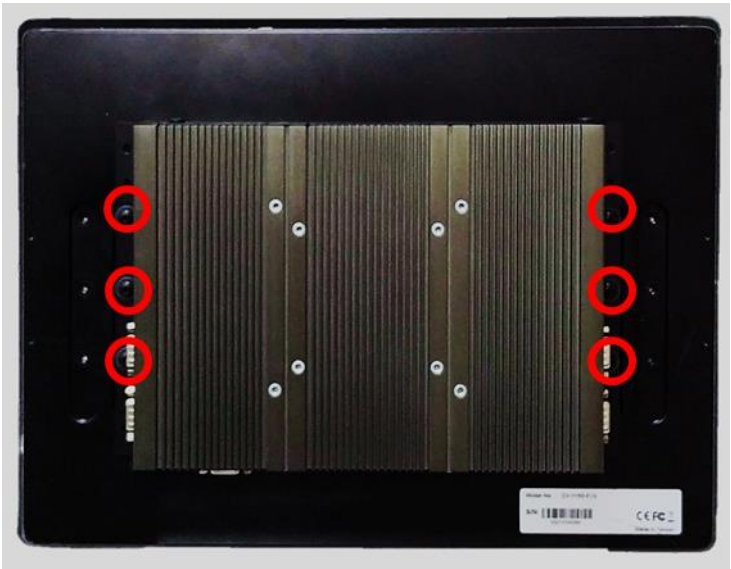

3.14 Installing Panel Mount

1. Accessories provided by Cincoze are as below. (Please note that the quantity of mounting kits varies with the size of the display module, please refer to the datasheet for the actual quantity)

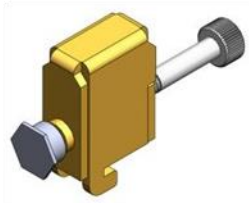

Mounting Kits

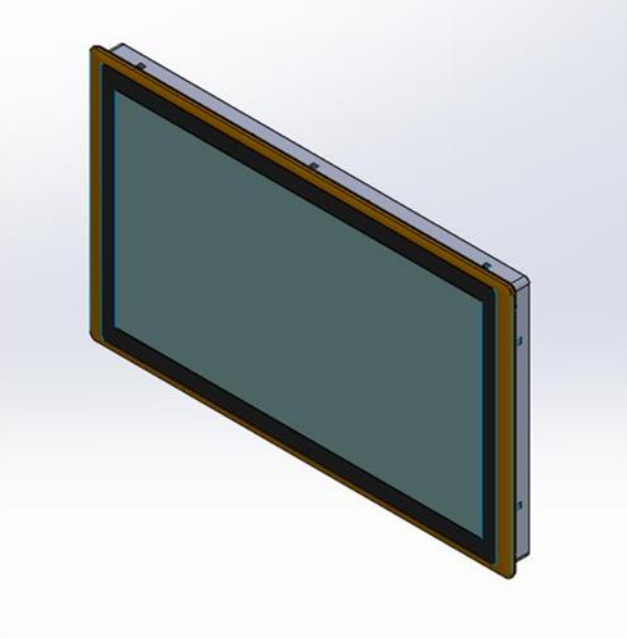

Panel Mount PPC

Panel Mount with customer's fixture
(Front View)

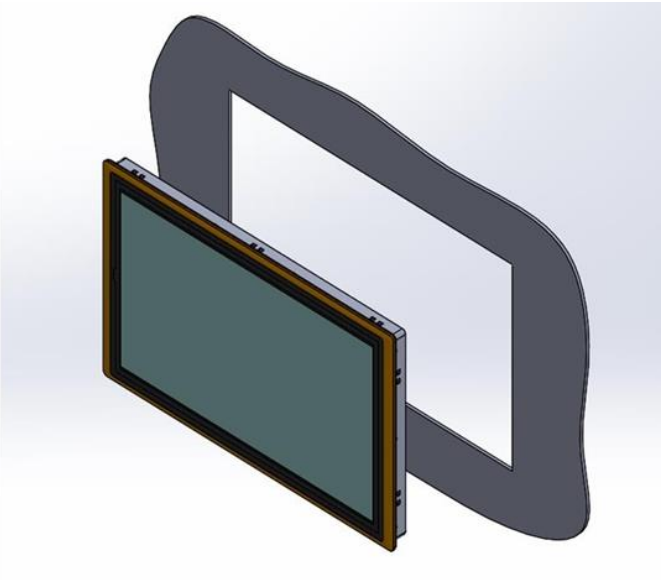

2. All mounting kits displayed are to be inserted into holes.

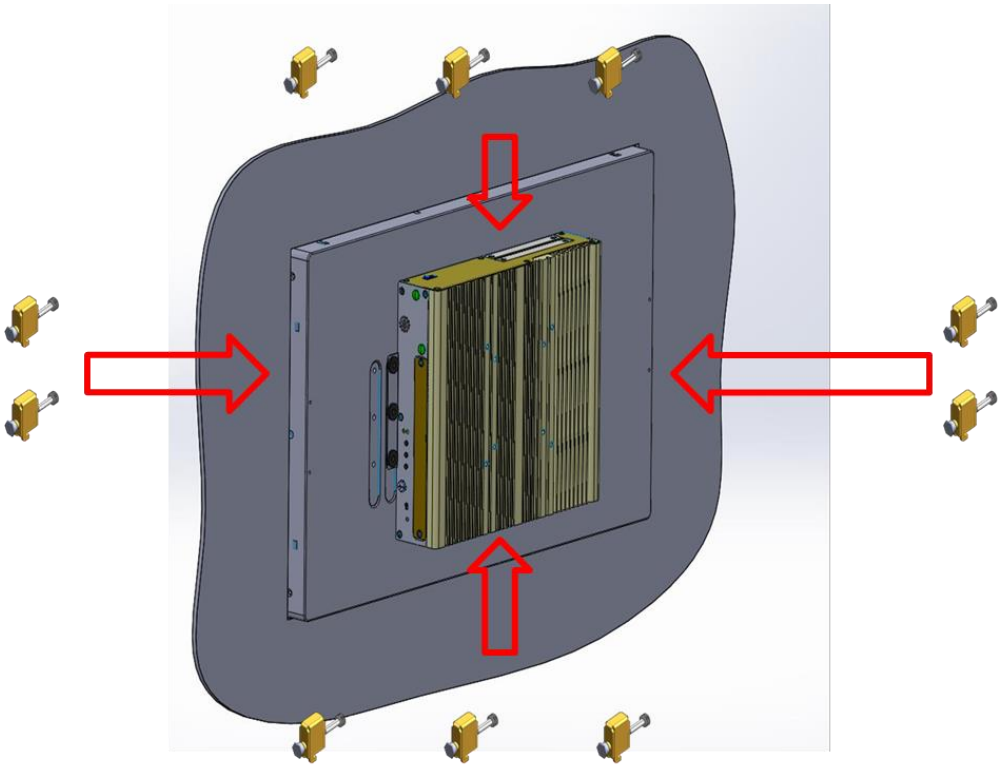

3. Installation preparation and steps.

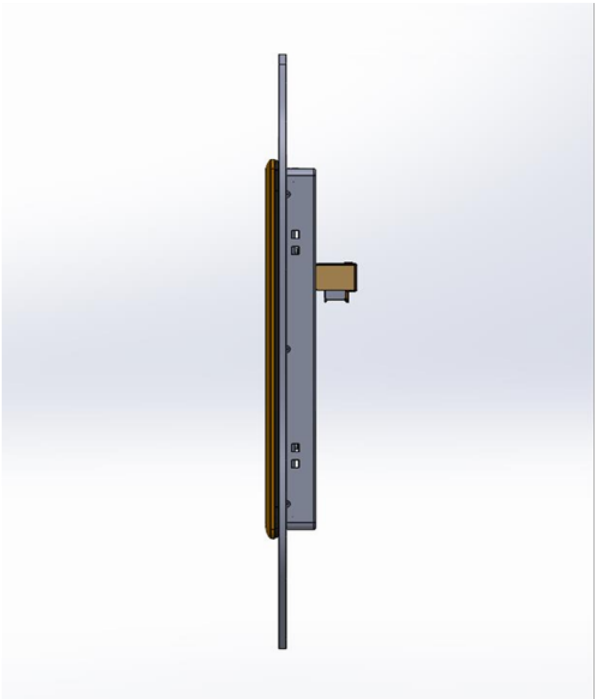

Panel mount side view with LVDS connector of CS series

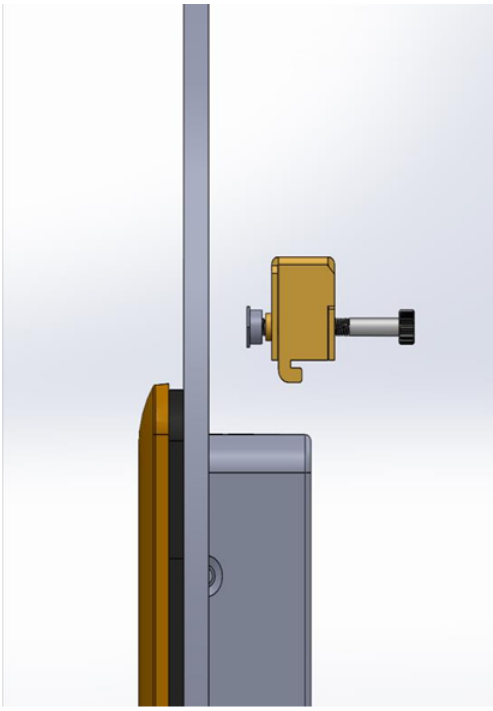

Before Mounting Kits are installed

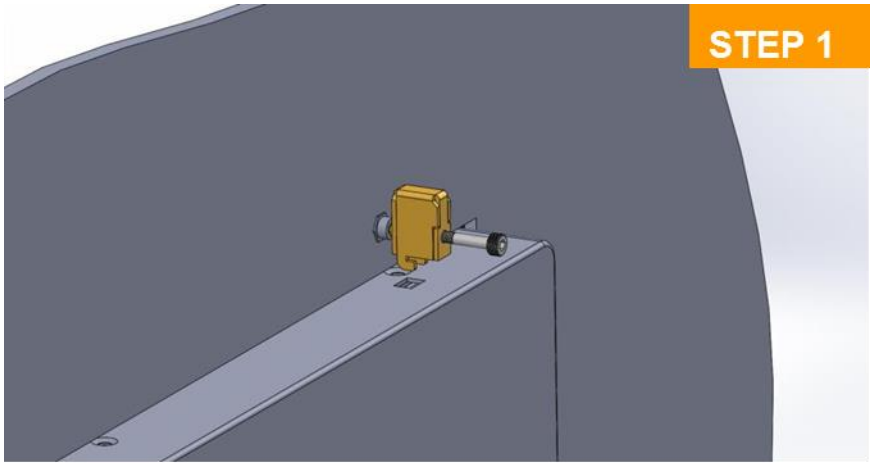

Position panel mount kits

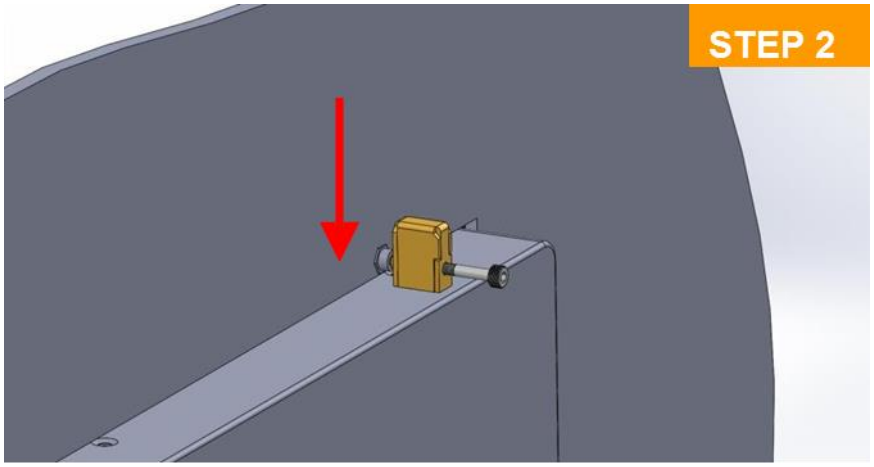

Insert the panel mounting kit into bottom hole

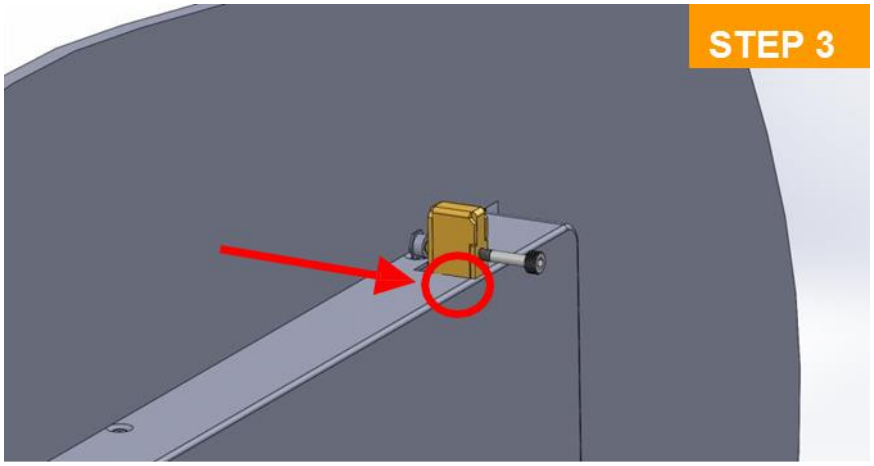

Slide the kit toward back

Chapter 4
BIOS Setup

4.1 BIOS Introduction

The BIOS (Basic Input/ Output System) is a program located on a Flash Memory on the motherboard. When you start the computer, the BIOS program will gain control. The BIOS first operates an auto-diagnostic test called POST (power on self-test) for all the necessary hardware, it detects the entire hardware device and configures the parameters of the hardware synchronization.

BIOS Setup

Power on the computer and by pressing <Del> immediately allows you to enter Setup. If the message disappears before your respond and you still wish to enter Setup, restart the system to try again by turning it OFF then ON or pressing <Ctrl>, <Alt> and <Delete> keys.

Control Keys	
<←> <→>	Move to select screen
<↑> <↓>	Move to select item
<Esc>	Quit the BIOS Setup
<Enter>	Select item
<Page Up/+>	Increases the numeric value or makes changes
<Page Down/->	Decreases the numeric value or makes changes
<Tab>	Select setup fields
<F1>	General help
<F2>	Previous value
<F3>	Load Optimized defaults
<F10>	Save configuration and Exit

Main Menu

The main menu lists the setup functions you can make changes to. You can use the arrow keys (↑↓) to select the item. The on-line description of the highlighted setup function is displayed at the bottom of the screen.

Sub-Menu

If you find a right pointer symbol appears to the left of certain fields that means a sub-menu can be launched from this field. A sub-menu contains additional options for a field parameter. You can use arrow keys (↑↓) to highlight the field and press <Enter> to call up the sub-menu. Then you can use the control keys to enter values and move from field to field within a sub-menu. If you want to return to the main menu, just press the <Esc >.

4.2 Main Setup

Press <Del> to enter BIOS CMOS Setup Utility, the Main Menu (as shown below) will appears on the screen. Use arrow keys to move among the items and press <Enter> to accept or enter a sub-menu.

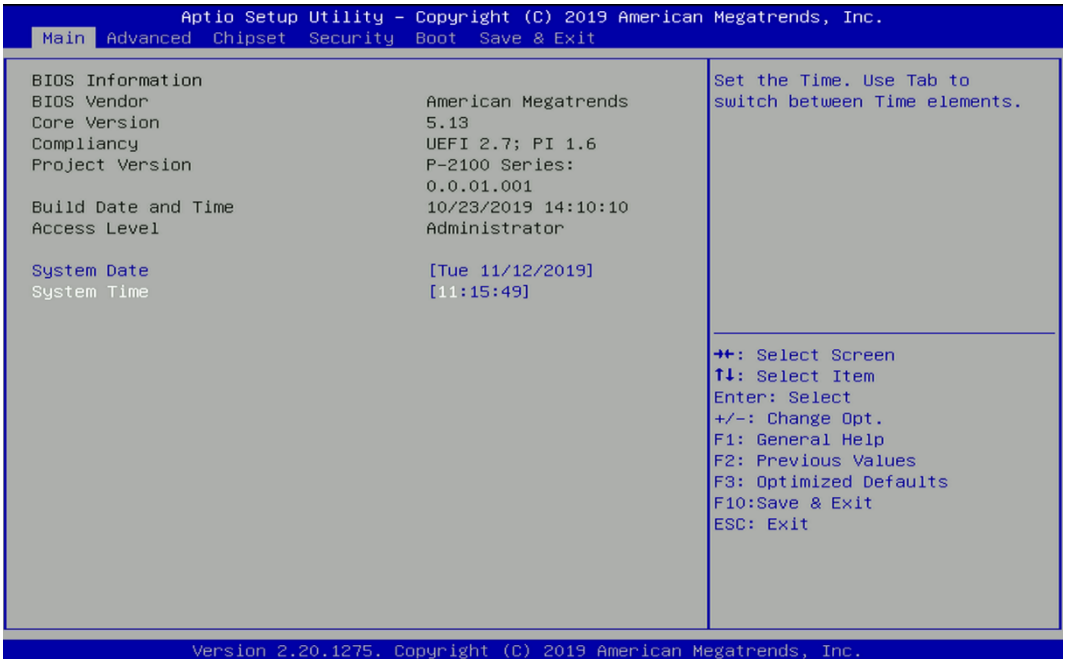

4.2.1 System Date

Set the date. Please use <Tab> to switch between date elements.

4.2.2 System Time

Set the time. Please use <Tab> to switch between time elements.

4.3 Advanced Setup

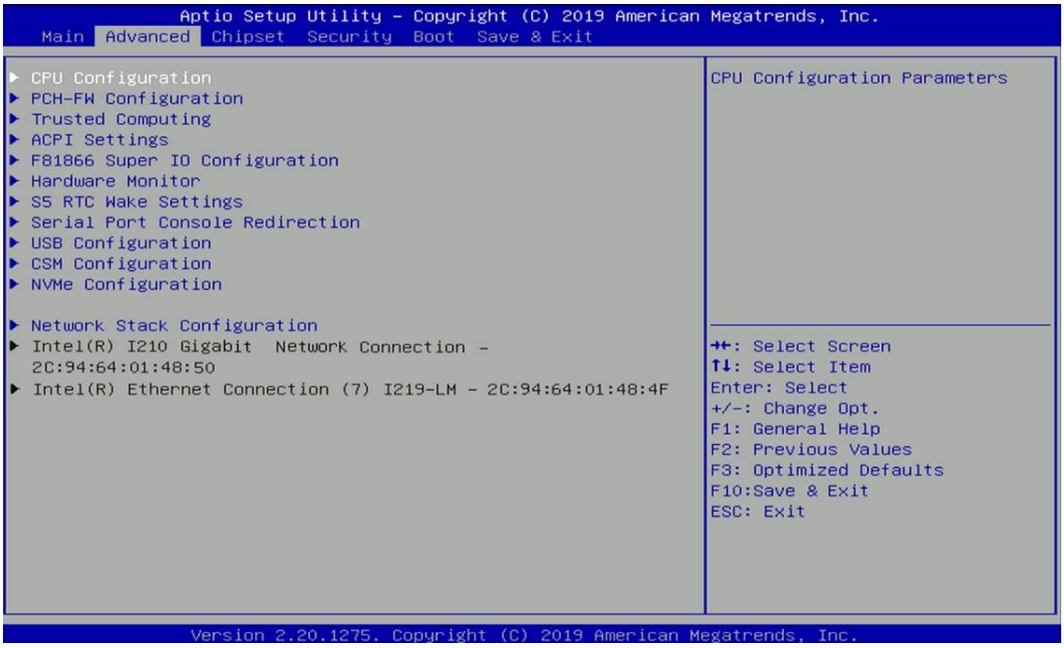

4.3.1 CPU Configuration

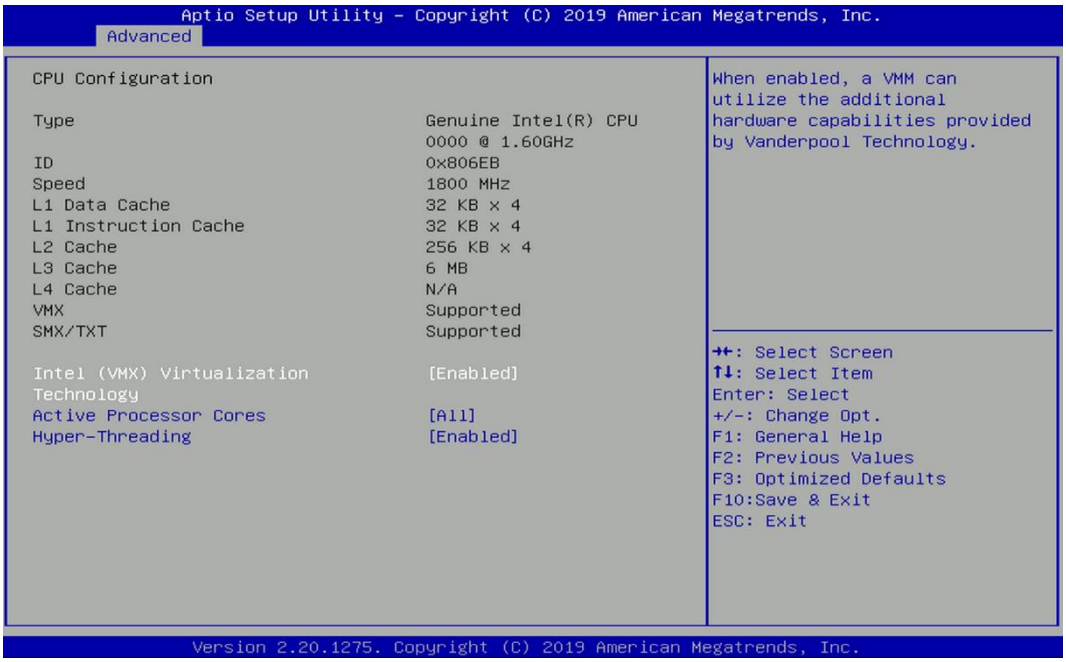

■ Intel® Virtualization Technology [Enabled]

Enables or disables Intel® Virtualization Technology. Virtualization enhanced by Intel® Virtualization Technology will allow a platform to run multiple operating systems and applications in independent partitions. With virtualization, one computer system can function as multiple virtual systems.

■ Active Process Cores [All]

Allows you to choose the number of active processor cores.

Configuration options: [All] [1] [2] [3]

■ Hyper-Threading [Enabled]

Allows you to enable or disable Intel® Hyper-Threading function of processor.

4.3.2 PCH-FW Configuration

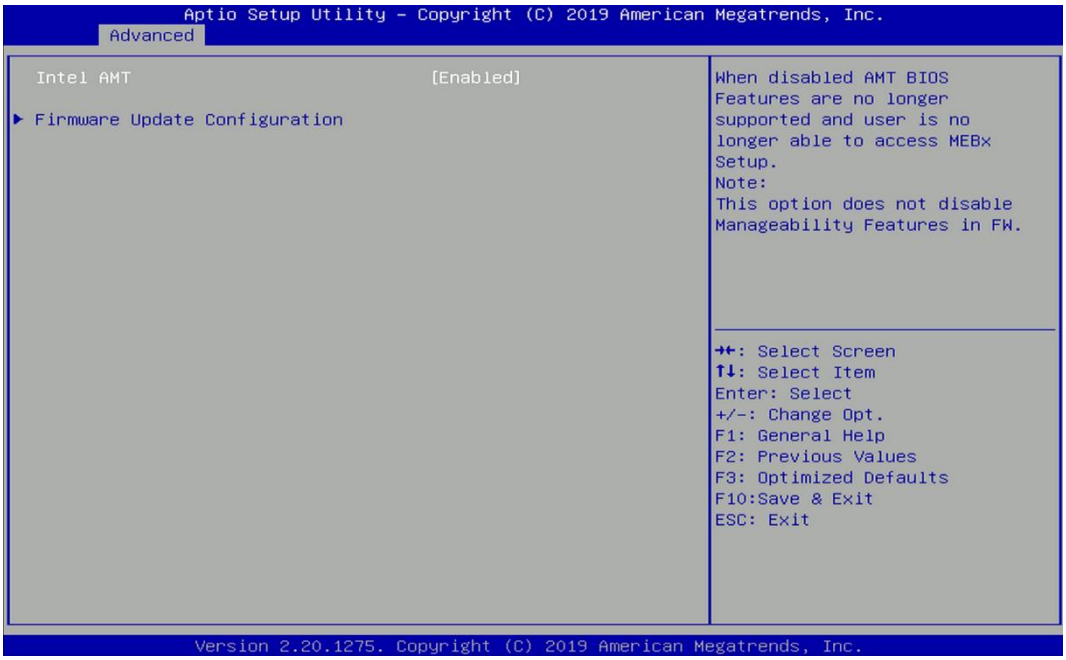

■ **Intel AMT [Enabled]**

Allows you to enable or disable Intel® Active Management Technology BIOS execution.

■ **Firmware Update Configuration**

❑ **ME FW Image Re-Flash [Disabled]**

Allows you to enable or disable ME firmware image re-flash function.

4.3.3 Trusted Computing

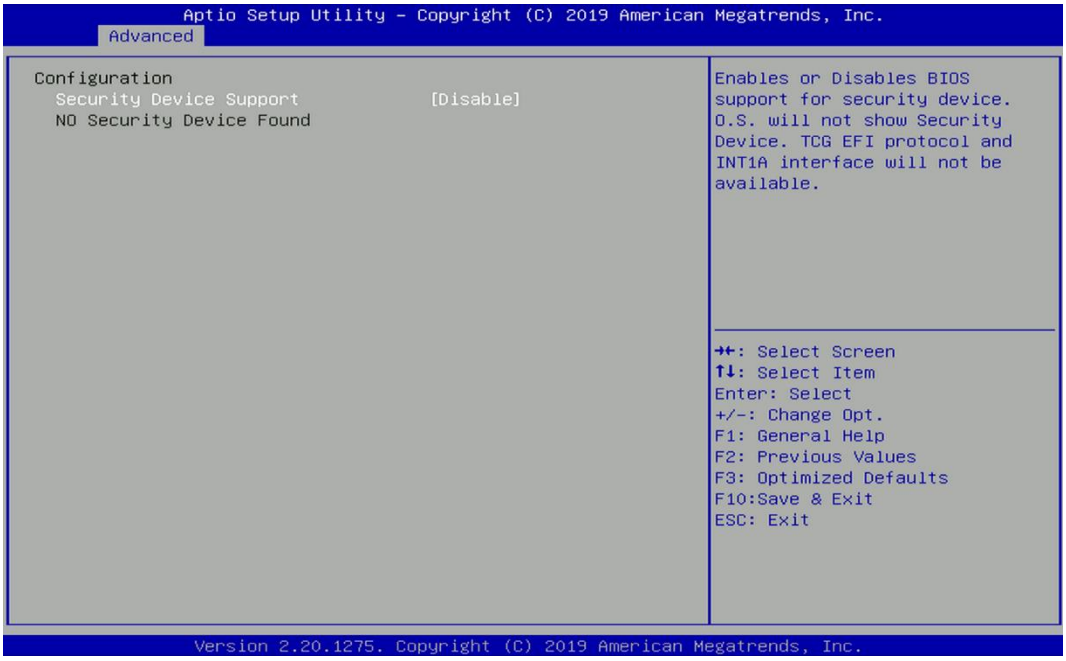

■ Security Device Support [Disable]

Allow you to enables or disables Security Device Support function.

4.3.4 ACPI Settings

This item allows users to configure ACPI settings.

■ Enable ACPI Auto Configuration [Enabled]

Enables or disables BIOS Advanced Configuration Power Interface® (ACPI) auto configuration.

■ ACPI Sleep State [S3 (Suspend to RAM)]

Allows users to select the highest Advanced Configuration Power Interface® (ACPI) sleep state that system will enter when suspend button is pressed.

[Suspend Disabled]: Disables entering suspend state.

[S3 (suspend to RAM)]: Enables suspend to RAM state.

4.3.5 F81866 Super IO Configuration

The screen allows users to select options for the Super IO configuration, and change the value of the selected option.

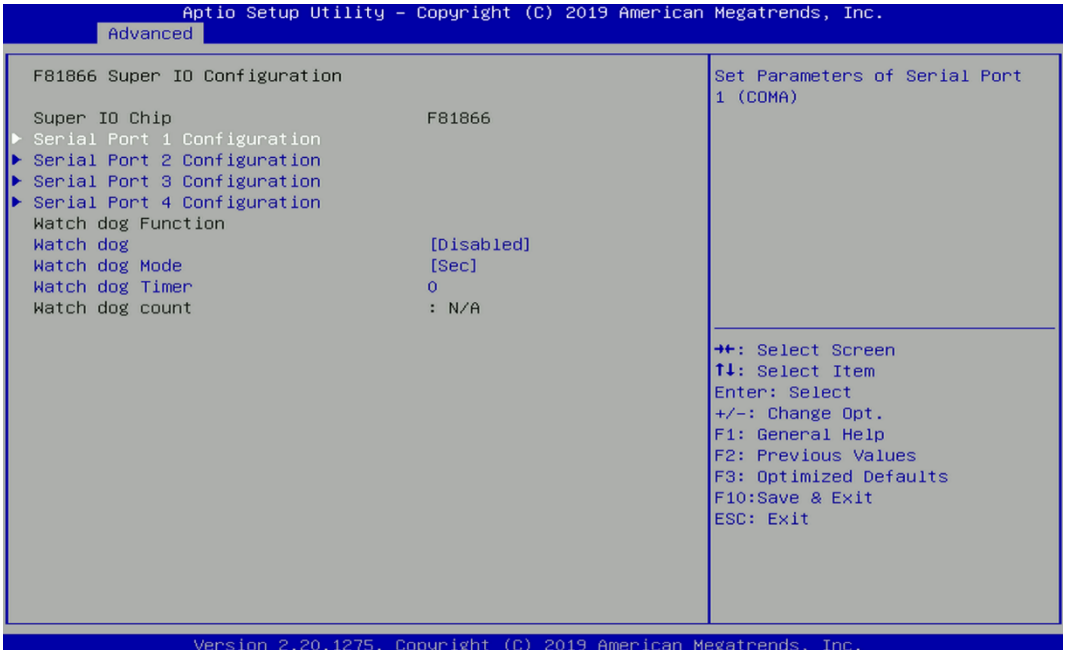

■ Serial Port 1~6 Configuration

- ❑ **Serial Port [Enabled]**

  This item allows users to enable or disable serial port.

- ❑ **Change Settings [Auto]**

This item allows users to change the address & IRQ settings of the specified serial port.

- **Onboard Serial Port 1 Mode [RS232]**

  This item allows users to select Serial Port Mode.

  Configuration options: [RS232] [RS422/RS485 Full Duplex] [RS485 Half Duplex]

Watch Dog [Disabled]

Enables or disables watch dog function.

Watch Dog Mode [Sec]

Changes the Watch dog mode. Select [Sec] or [Min] mode.

Watch Dog Timer [0]

User can set a value in the range of 0 to 255.

4.3.6 Hardware Monitor

These items display the current status of all monitored hardware devices/ components such as voltages and temperatures.

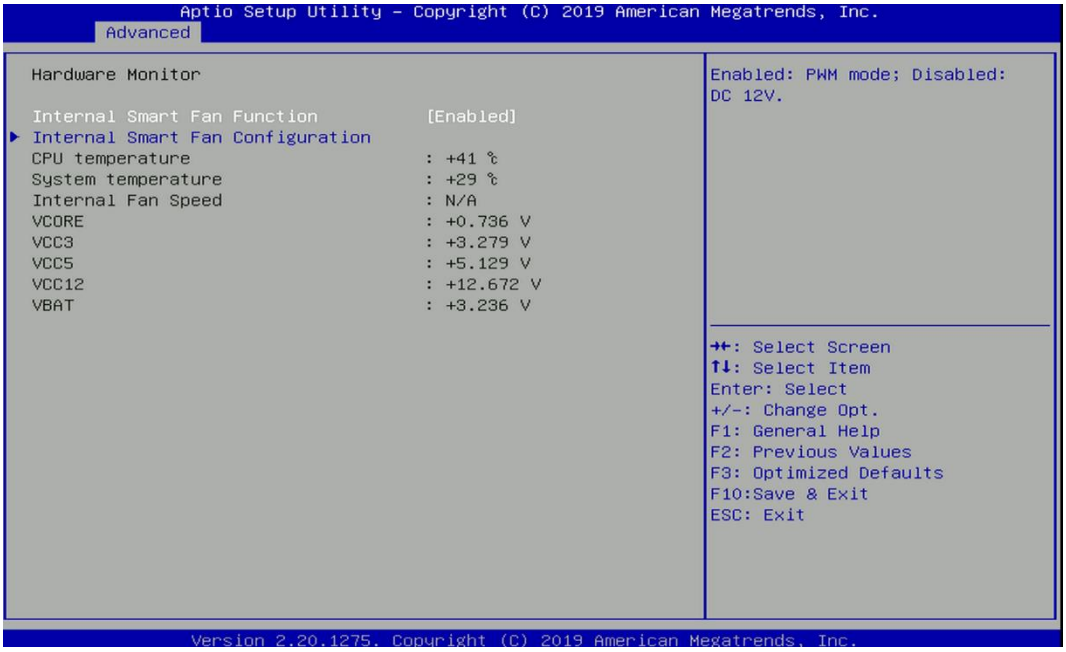

Internal Smart Fan Function [Enabled]

Enables or disables internal smart fan function.

Internal Smart Fan Configuration

Allows users to setting internal smart fan parameters.

4.3.7 S5 RTC Wake Settings

■ Wake System from S5 [Disabled]

This item allows users to change the way to wake system from S5 state.

[Fixed Time]: Set the specified time (HH:MM:SS) to wake system.

[Dynamic Time]: Set the increase time from current time to wake system.

4.3.8 Serial Port Console Redirection

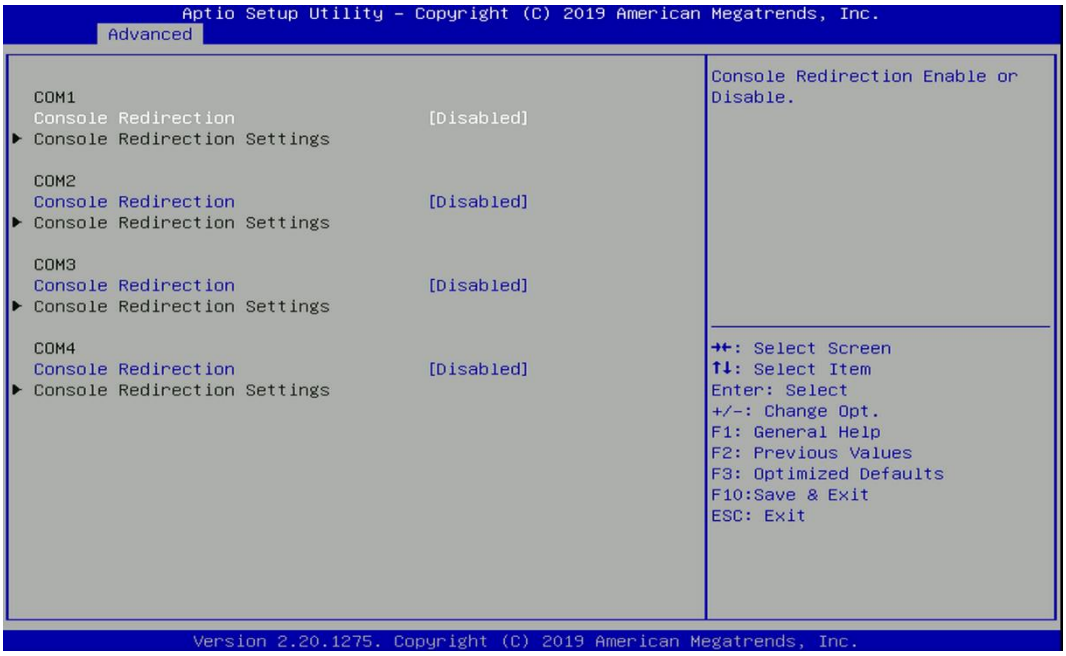

■ Console Redirection [Disabled]

These items allow users to enable or disable COM0, COM1, COM2, COM3, Com4, COM5 console redirection function.

4.3.9 USB Configuration

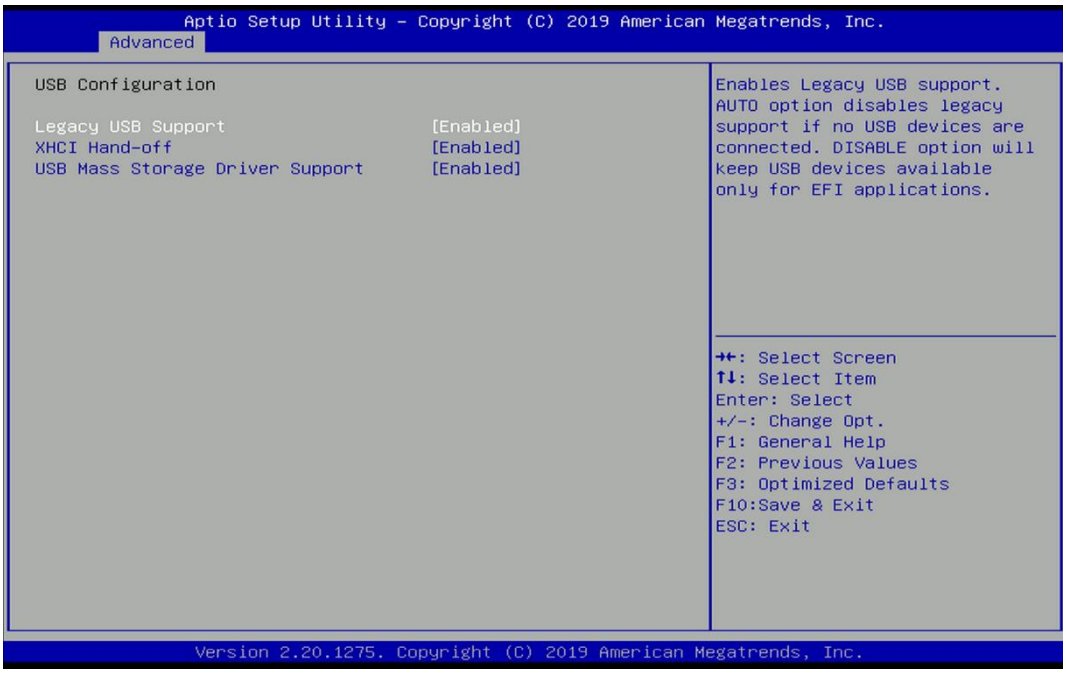

■ Legacy USB Support [Enabled]

This item allows users to enable or disable legacy USB support. When set to [Auto], legacy USB support will be disabled automatically if no USB devices are connected.

■ XHCI Hand-off [Enabled]

This item allows users to enable or disable XHCI (USB3.2) hand-off function.

■ USB Mass Storage Driver Support [Enabled]

Enables or disables support for USB mass storage devices.

4.3.10 CSM Configuration

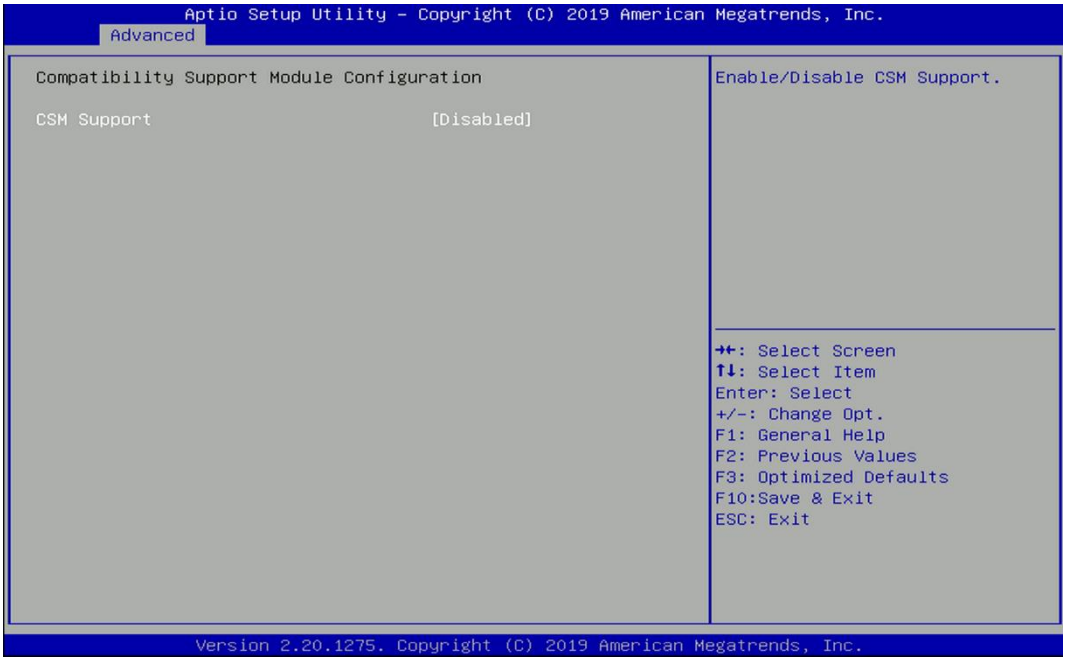

■ CSM Support [Disabled]

This item allows users to enable or disable UEFI Compatibility Support Module (CSM) to support a legacy PC boot process.

4.3.11 NVMe Configuration

The screen allows users to select options for the NVMe configuration, and change the value of the selected option. The options will show as the NVME Device is found.

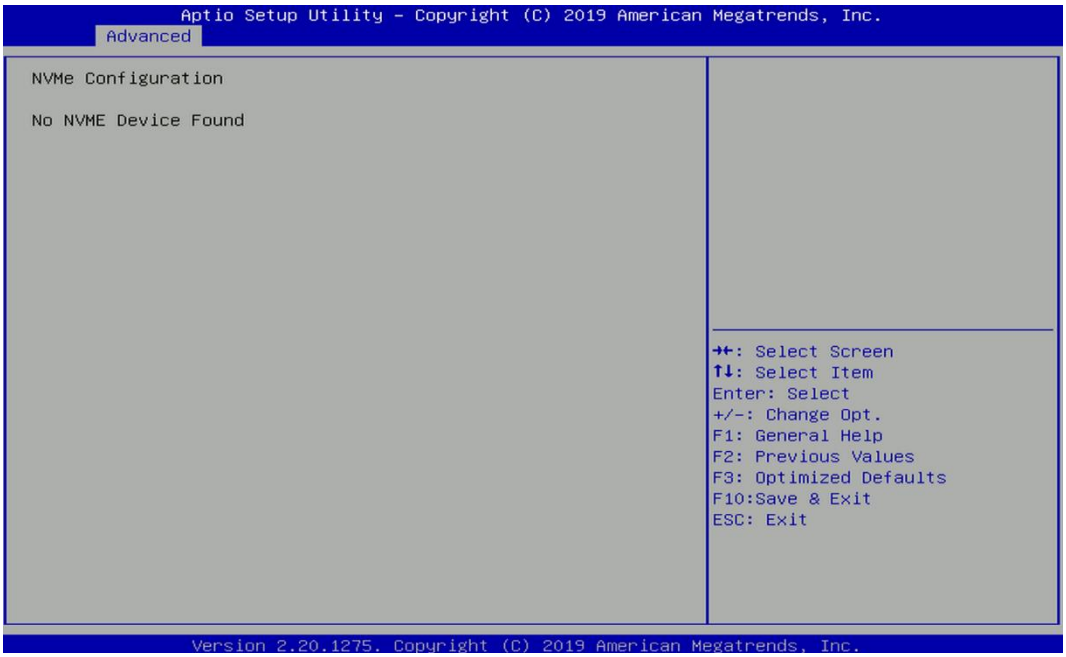

4.3.12 Network Stack Configuration

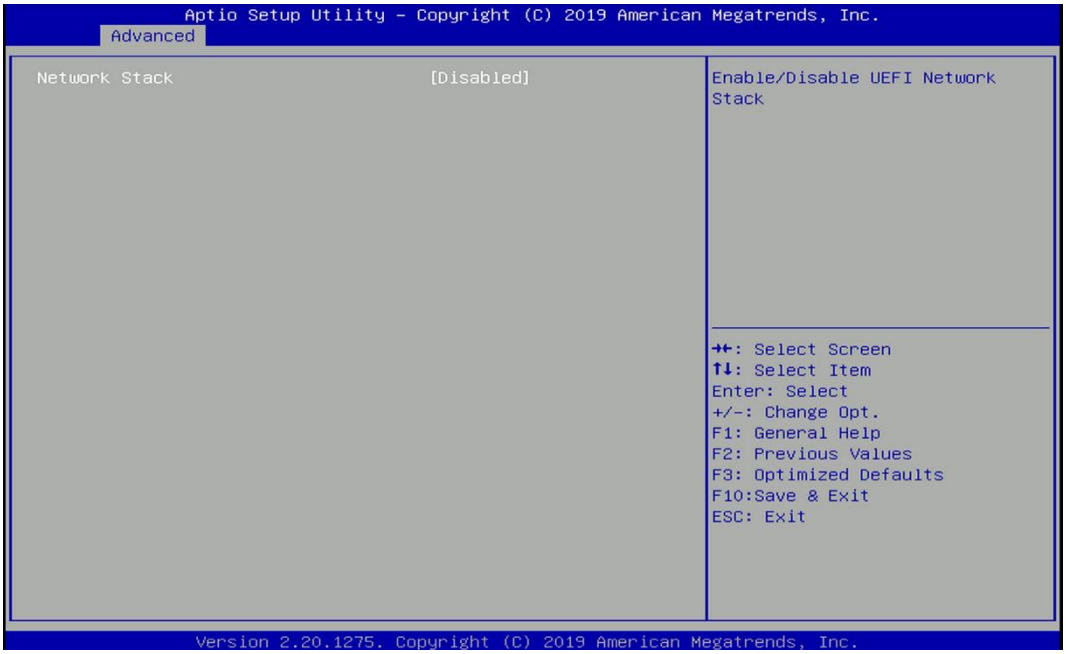

■ Network Stack [Disabled]

Enables or disables UEFI Network Stack.

4.4 Chipset Setup

This section allows you to configure chipset related settings according to user's preference.

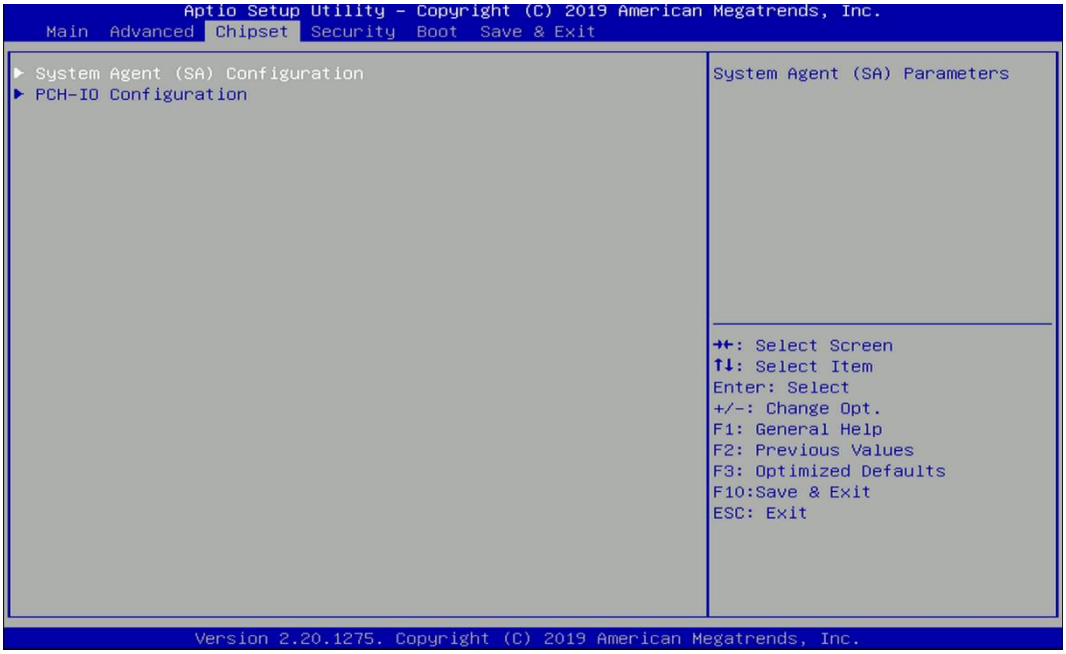

4.4.1 System Agent (SA) Configuration

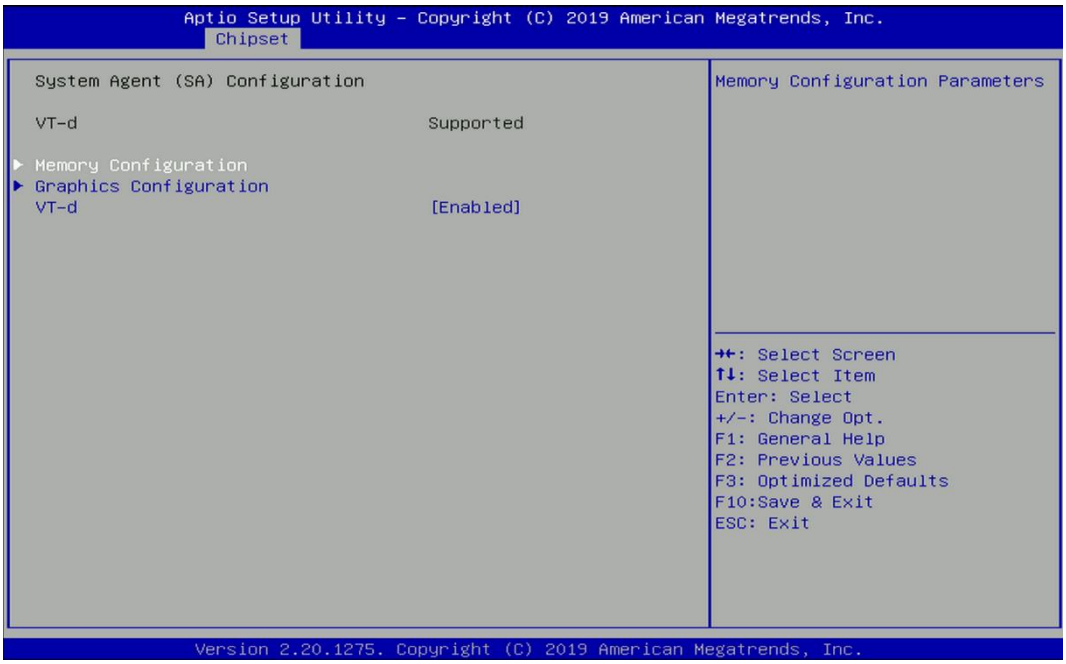

■ Memory Configuration

This item displays detailed memory information in the system.

■ Graphics Configuration

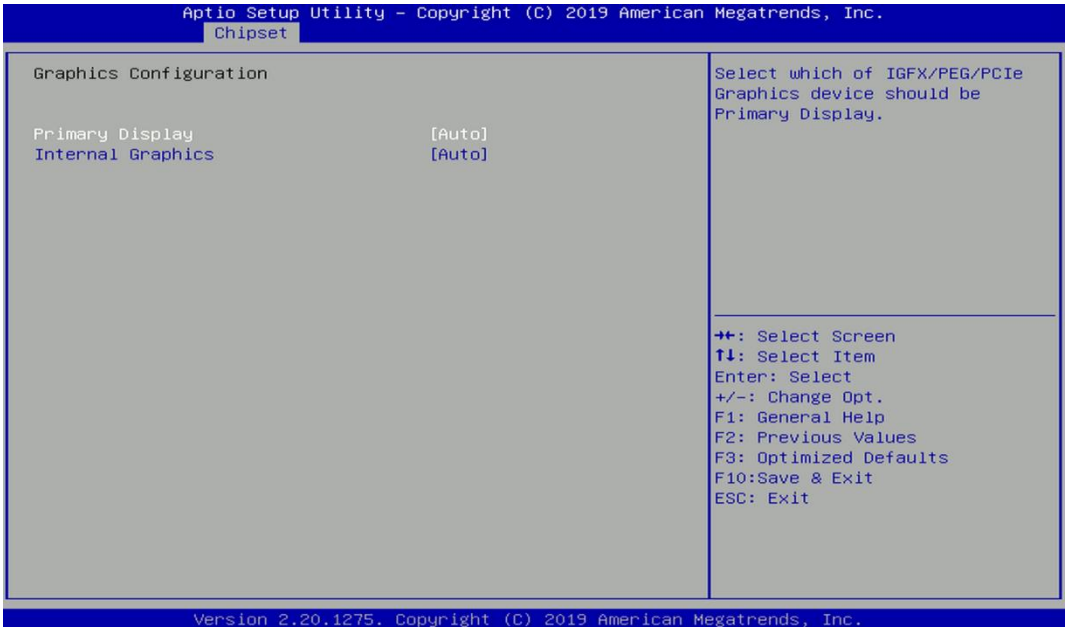

- **Primary Display [Auto]**

  Allows users to select which graphics device should be primary display or select SG for switchable graphics.

  Configuration options: [Auto] [IGFX] [PEG] [PCIe] [SG]

- **Internal Graphics [Auto]**

  This item allows users to enable or disable Internal Graphics. When set to [Auto], it will detect by BIOS. Configuration options: [Auto] [Disabled] [Enabled]

■ VT-d [Enabled]

This item allows users to enable or disable Intel® Virtualization Technology for Directed I/O (VT-d) function.

4.4.2 PCH-IO Configuration

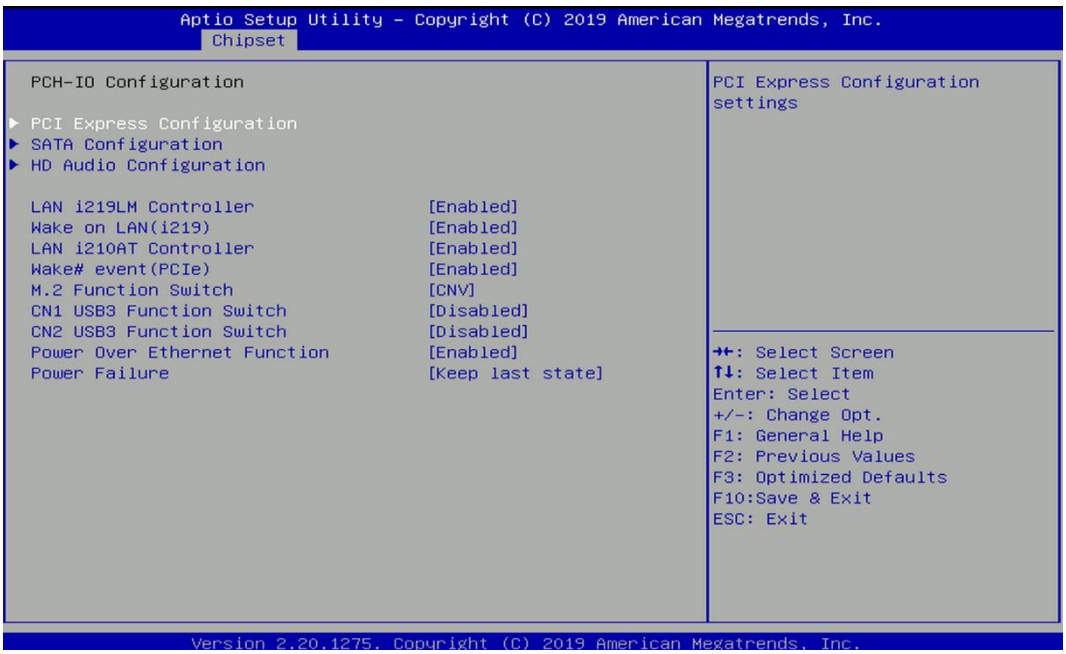

PCI Express Configuration

- **PCI Express Root Port (CN1 mPCIe)**
  - **PCI Express Root Port [Enabled]**

    Allows you to enable or disable the PCI Express Port.
  - **PCIe Speed [Auto]**

    Allows you to select PCI Express interface speed.

    Configuration options: [Auto] [Gen1] [Gen2] [Gen3].
- **PCI Express Root Port (CN2 mPCIe)**
  - **PCI Express Root Port [Enabled]**

    Allows you to enable or disable the PCI Express Port.
  - **PCIe Speed [Auto]**

    Allows you to select PCI Express interface speed.

    Configuration options: [Auto] [Gen1] [Gen2] [Gen3].
- **PCI Express Root Port (CN3 M.2 PCIE)**
  - **PCI Express Root Port [Enabled]**

    Allows you to enable or disable the PCI Express Port.
  - **PCIe Speed [Auto]**

    Allows you to select PCI Express interface speed.

    Configuration options: [Auto] [Gen1] [Gen2] [Gen3].
- **PCI Express Root Port (PCIe1 Slot X4)**
  - **PCI Express Root Port [Enabled]**

    Allows you to enable or disable the PCI Express Port.
  - **PCIe Speed [Auto]**

    Allows you to select PCI Express interface speed.

    Configuration options: [Auto] [Gen1] [Gen2] [Gen3].

SATA Configuration

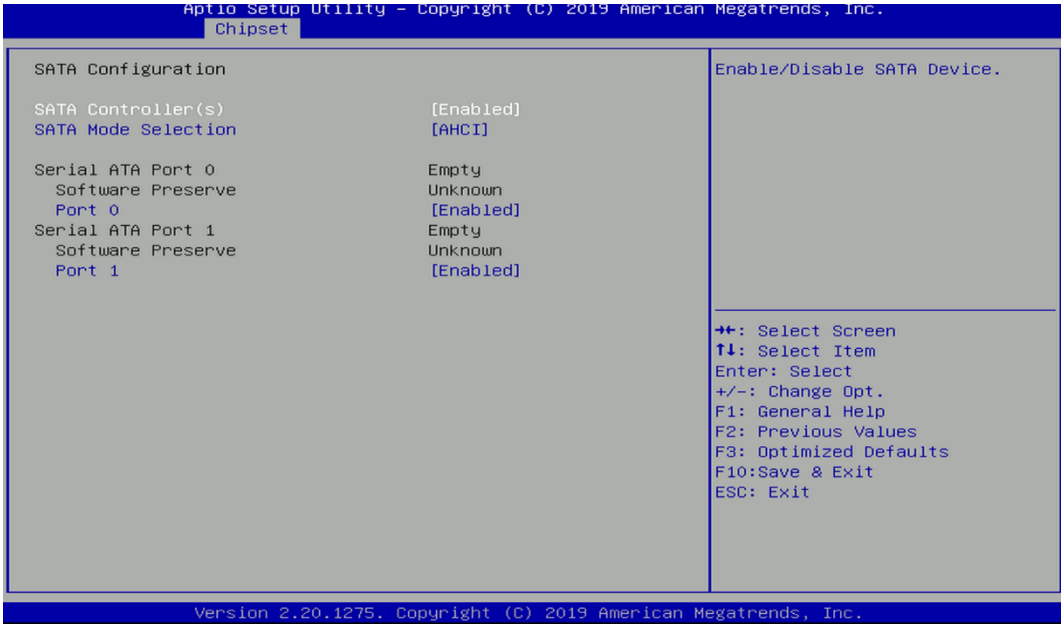

- **SATA Controller(s) [Enabled]**

  Enables or disables Serial ATA controller.

- **SATA Mode [AHCI]**

  This item allows users to choose [AHCI] or [RAID] mode.

- **Serial ATA Port 0**

  Port 0 [Enabled]

  Enables or disables SATA Port 0.

- **Serial ATA Port 1**

  Port 1 [Enabled]

  Enables or disables SATA Port 1.

HD Audio Configuration

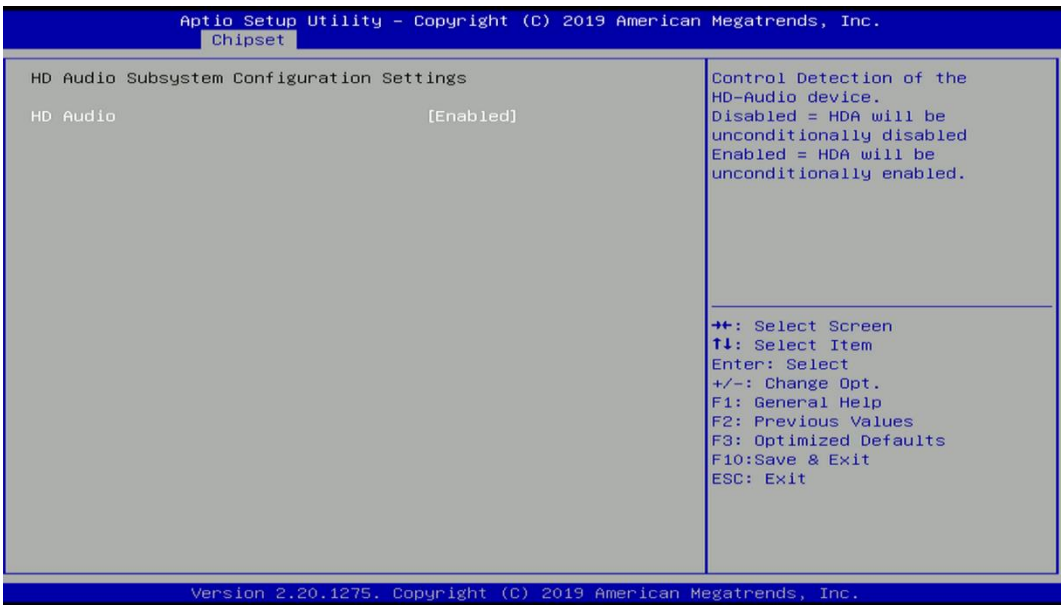

- **HD Audio [Enabled]**

  Allows you to select HD Audio options.

  [Enabled]: HD Audio device is unconditionally enabled.

  [Disabled]: HD Audio device is unconditionally disabled.

LAN i219LM Controller [Enabled]

Enables or disables i219LM LAN Controller.

Wake On LAN (i219) [Enabled]

Enables or disables integrated LAN I219LM Wake On LAN function.

LAN i210AT Controller [Enabled]

Enables or disables I210 LAN Controller.

Wake# event (PCIe) [Enabled]

Enables or disables integrated LAN I210 Wake On LAN function.

M.2 function Switch [CNV]

Select CNV/PCIe for M.2 connector.

CN1 USB3 Function Switch [Disabled]

Enables or disables CN1 USB3 Controller.

CN2 USB3 Function Switch [Disabled]

Enables or disables CN2 USB3 Controller.

Power Over Ethernet Function [Disabled]

Enable or disable Power Over Ethernet (POE) function.

Power Failure [Keep last state]

Allows you to specify which power state system will enter when power is resumed after a power failure (G3 state).

[Always on]: Enters to power on state.

[Always off]: Enters to power off state.

[Keep last state]: Enters to the last power state before a power failure.

4.5 Security Setup

This section allows users to configure BIOS security settings.

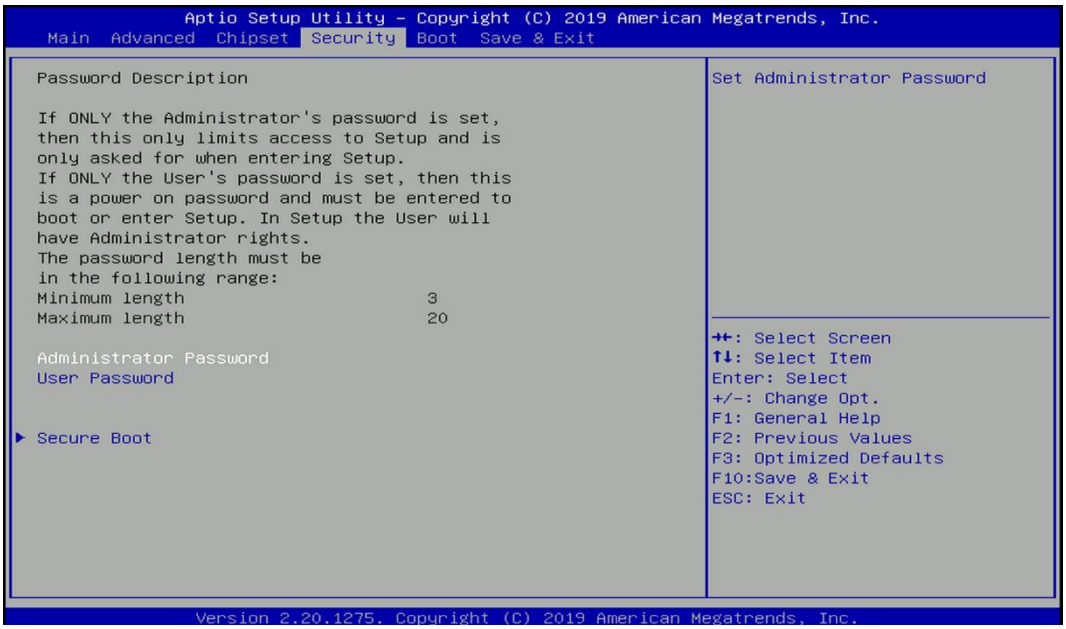

4.5.1 Administrator Password

Administrator Password controls access to the BIOS Setup utility.

4.5.2 User Password

User Password controls access to the system at boot and to the BIOS Setup utility.

4.5.3 Security Boot

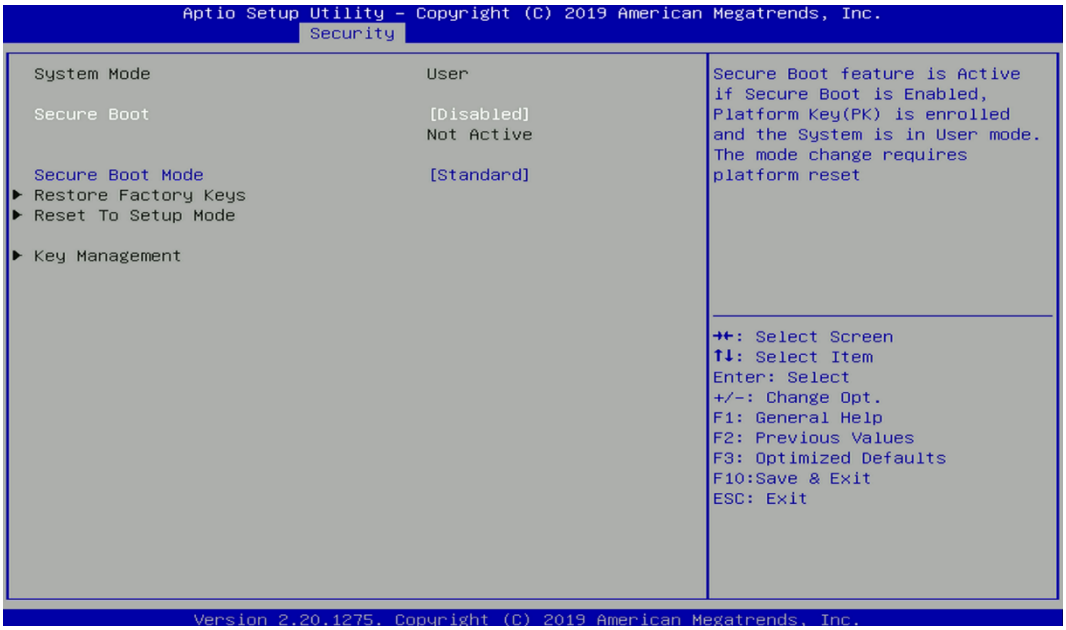

- **Secure Boot [Disabled]**

  Enable or disable Secure Boot function.

- **Secure Boot Mode [Standard]**

  Allows you to select Secure Boor Mode.

  Configuration options: [Standard] [Custom].

4.6 Boot Setup

This section allows you to configure Boot settings.

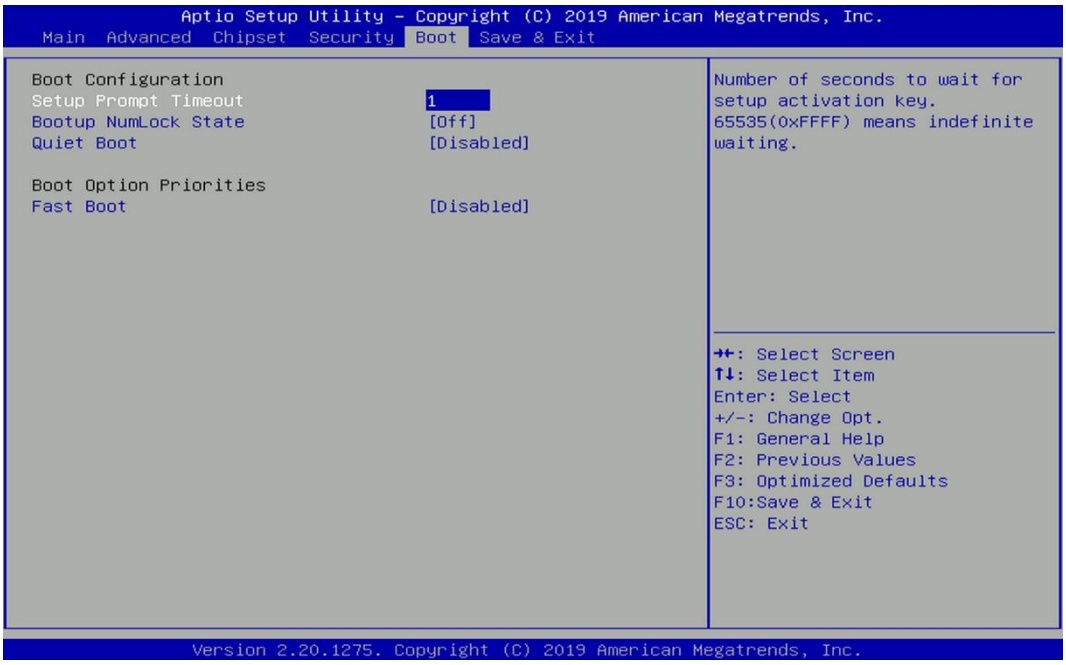

4.6.1 Setup Prompt Timeout [1]

Use this item to set number of seconds (1..65535) to wait for setup activation key.

4.6.2 Bootup NumLock State [Off]

Allows you to select the power-on state for keyboard NumLock.

4.6.3 Quiet Boot [Disabled]

Allows you to enable or disable Quiet Boot function.

4.6.4 Fast Boot [Disabled]

Allows you to enable or disable Fast Boot function.

4.7 Save & Exit

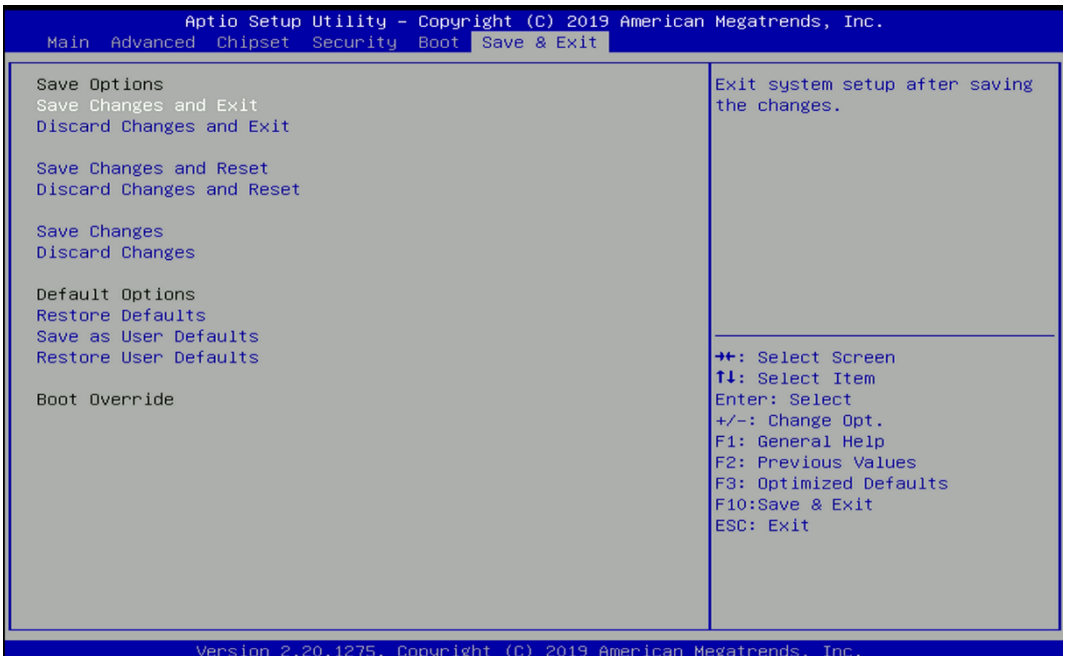

4.7.1 Save Changes and Exit

This item allows you to exit system setup after saving changes.

4.7.2 Discard Changes and Exit

This item allows you to exit system setup without saving changes.

4.7.3 Save Changes and Reset

This item allows you to reset the system after saving changes.

4.7.4 Discard Changes and Reset

This item allows you to reset system setup without saving any changes.

4.7.5 Save Changes

This item allows you to save changes done so far to any of the setup options.

4.7.6 Discard Changes

This item allows you to discard changes done so far to any of the setup options.

4.7.7 Restore Defaults

This item allows you to restore/ load default values for all the options.

4.7.8 Save as User Defaults

This item allows you to save the changes done so far as user defaults.

4.7.9 Restore User Defaults

This item allows you to restore the user defaults to all the options.

Chapter 5
Product Application

5.1 Digital I/O (DIO) application

This section describes DIO application of the product. The content and application development are better understood and implemented by well experienced professionals or developers.

5.1.1 Digital I/O Programming Guide

5.1.1.1 Pins for Digital I/O

Item	Standard
GPIO70 (Pin103)	DI
GPIO71 (Pin104)	
GPIO72 (Pin105)	
GPIO73 (Pin106)	
GPIO74 (Pin107)	
GPIO75 (Pin108)	
GPIO76 (Pin109)	
GPIO77 (Pin110)	
GPIO80 (Pin111)	DO
GPIO81 (Pin112)	
GPIO82 (Pin113)	
GPIO83 (Pin114)	
GPIO84 (Pin115)	
GPIO85 (Pin116)	
GPIO86 (Pin117)	
GPIO87 (Pin118)	

5.1.1.2 Programming Guide

To program the Super I/O chip F81866A configuration registers, the following configuration procedures must be followed in sequence:

(1) Enter the Extended Function Mode

(2) Configure the configuration registers

(3) Exit the Extended Function Mode

The configuration register is used to control the behavior of the corresponding devices. To configure the register, use the index port to select the index and then write data port to alter the parameters. The default index port and data port are 0x4E and 0x4F, respectively.

Pull down the SOUT1 pin to change the default value to 0x2E/ 0x2F. To enable configuration, the entry key 0x87 must be written to the index port. To disable configuration, write exit entry key 0xAA to the index port.

Following is an example to enable configuration and to disable configuration by using debug.

-o 4e 87

-o 4e 87 (enable configuration)

-o 4e aa (disable configuration)

5.1.1.3 Relative Registers

To program the F81866A configuration registers, see the following configuration procedures.

Logic Device Number Register (LDN) — Index 07h

Bit	Name	R/W	Reset	Default	Description
7-0	LDN	R/W	LRESET#	00h	00h: Select FDC device configuration registers. 03h: Select Parallel Port device configuration registers. 04h: Select Hardware Monitor device configuration registers. 05h: Select KBC device configuration registers. 06h: Select GPIO device configuration registers. 07h: Select WDT device configuration registers. 0Ah: Select PME, ACPI and ERP device configuration registers. 10h: Select UART1 device configuration registers. 11h: Select UART2 device configuration registers. 12h: Select UART3 device configuration registers. 13h: Select UART4 device configuration registers. 14h: Select UART5 device configuration registers. 15h: Select UART6 device configuration registers. Otherwise: Reserved.

7.7.11.1GPIO7 Output Enable Register — Index 80h

Bit	Name	R/W	Reset	Default	Description
7	GPIO77_OE	R/W	LRESET#	0	0: GPIO77 is in input mode. 1: GPIO77 is in output mode.
6	GPIO76_OE	R/W	LRESET#	0	0: GPIO76 is in input mode. 1: GPIO75 is in output mode.
5	GPIO75_OE	R/W	LRESET#	0	0: GPIO75 is in input mode. 1: GPIO75 is in output mode.
4	GPIO74_OE	R/W	LRESET#	0	0: GPIO74 is in input mode. 1: GPIO74 is in output mode.
3	GPIO73_OE	R/W	LRESET#	0	0: GPIO73 is in input mode. 1: GPIO73 is in output mode.
2	GPIO72_OE	R/W	LRESET#	0	0: GPIO72 is in input mode. 1: GPIO72 is in output mode.
1	GPIO71_OE	R/W	LRESET#	0	0: GPIO71 is in input mode. 1: GPIO71 is in output mode.
0	GPIO70_OE	R/W	LRESET#	0	0: GPIO70 is in input mode. 1: GPIO70 is in output mode.

8.7.13.3GPIO7 Pin Status Register — Index 82h (This byte could be also read by base address + 3)

Bit	Name	R/W	Reset	Default	Description
7	GPIO77_IN	R	-	-	The pin status of GPIO77/STB#.
6	GPIO76_IN	R	-	-	The pin status of GPIO76/AFD#.
5	GPIO75_IN	R	-	-	The pin status of GPIO75/ERR#.
4	GPIO74_IN	R	-	-	The pin status of GPIO74/INIT#.
3	GPIO73_IN	R	-	-	The pin status of GPIO73/SLIN#.
2	GPIO72_IN	R	-	-	The pin status of GPIO72/ACK#.
1	GPIO71_IN	R	-	-	The pin status of GPIO71/BUSY.
0	GPIO70_IN	R	-	-	The pin status of GPIO70/PE/FANCTL3/PWM_DAC3.

7.7.12.1GPIO8 Output Enable Register — Index 88h

Bit	Name	R/W	Reset	Default	Description
7	GPIO87_OE	R/W	LRESET#	0	0: GPIO87 is in input mode. 1: GPIO87 is in output mode.
6	GPIO86_OE	R/W	LRESET#	0	0: GPIO86 is in input mode. 1: GPIO85 is in output mode.
5	GPIO85_OE	R/W	LRESET#	0	0: GPIO85 is in input mode. 1: GPIO85 is in output mode.
4	GPIO84_OE	R/W	LRESET#	0	0: GPIO84 is in input mode. 1: GPIO84 is in output mode.
3	GPIO83_OE	R/W	LRESET#	0	0: GPIO83 is in input mode. 1: GPIO83 is in output mode.
2	GPIO82_OE	R/W	LRESET#	0	0: GPIO82 is in input mode. 1: GPIO82 is in output mode.
1	GPIO81_OE	R/W	LRESET#	0	0: GPIO81 is in input mode. 1: GPIO81 is in output mode.
0	GPIO80_OE	R/W	LRESET#	0	0: GPIO80 is in input mode. 1: GPIO80 is in output mode.

7.7.12.2GPIO8 Output Data Register — Index 89h (This byte could be also written by base address + 2)

Bit	Name	R/W	Reset	Default	Description
7	GPIO87_VAL	R/W	LRESET#	1	0: GPIO87 outputs 0 when in output mode. 1: GPIO87 outputs 1 when in output mode.
6	GPIO86_VAL	R/W	LRESET#	1	0: GPIO86 outputs 0 when in output mode. 1: GPIO86 outputs 1 when in output mode.
5	GPIO85_VAL	R/W	LRESET#	1	0: GPIO85 outputs 0 when in output mode. 1: GPIO85 outputs 1 when in output mode.
4	GPIO84_VAL	R/W	LRESET#	1	0: GPIO84 outputs 0 when in output mode. 1: GPIO84 outputs 1 when in output mode.
3	GPIO83_VAL	R/W	LRESET#	1	0: GPIO83 outputs 0 when in output mode. 1: GPIO83 outputs 1 when in output mode.
2	GPIO82_VAL	R/W	LRESET#	1	0: GPIO82 outputs 0 when in output mode. 1: GPIO82 outputs 1 when in output mode.
1	GPIO81_VAL	R/W	LRESET#	1	0: GPIO81 outputs 0 when in output mode. 1: GPIO81 outputs 1 when in output mode.
0	GPIO80_VAL	R/W	LRESET#	1	0: GPIO80 outputs 0 when in output mode. 1: GPIO80 outputs 1 when in output mode.

5.1.1.4 Sample Code in C Language

5.1.1.4.1 Control of GP70 to GP77

```
#define AddrPort 0x4E
#define DataPort 0x4F

<Enter the Extended Function Mode>
WriteByte(AddrPort, 0x87)
WriteByte(AddrPort, 0x87)                // Must write twice to enter Extended mode

<Select Logic Device>
WriteByte(AddrPort, 0x07)
WriteByte(dataPort, 0x06)                // Select logic device 06h

<Output/Input Mode Selection>            // Set GP70 to GP77 input Mode
WriteByte(AddrPort, 0x80)            // Select configuration register 80h
WriteByte(DataPort, (ReadByte(DataPort) | 0x00))
// Set (bit 0~7) = 0 to select GP 70~77 as Input mode.

<Input Value>
WriteByte(AddrPort, 0x82)            // Select configuration register 82h
ReadByte(DataPort, Value)            // Read bit 0~7 (0xFF)= GP70 ~77 as High.

<Leave the Extended Function Mode>
WriteByte(AddrPort, 0xAA)
```

5.1.1.4.2 Control of GP80 to GP87

```
#define AddrPort 0x4E
#define DataPort 0x4F

<Enter the Extended Function Mode>
WriteByte(AddrPort, 0x87)
WriteByte(AddrPort, 0x87)          // Must write twice to enter Extended mode

<Select Logic Device>
WriteByte(AddrPort, 0x07)
WriteByte(DataPort, 0x06)          // Select logic device 06h

<Output/Input Mode Selection>      // Set GP80 to GP87 output Mode
WriteByte(AddrPort, 0x88)          // Select configuration register 88h
WriteByte(DataPort, (ReadByte(DataPort) & 0xFF))
// Set (bit 0~7) = 1 to select GP 80 ~87 as Output mode.

<Output Value>
WriteByte(AddrPort, 0x89)          // Select configuration register 89h
WriteByte(DataPort, Value)         // Set bit 0~7=(0/1) to output GP 80~87 as Low or High

<Leave the Extended Function Mode>
WriteByte(AddrPort, 0xAA)
```

5.1.1.5 Change base address

```
<Enter the Extended Function Mode>
WriteByte(AddrPort, 0x87)
WriteByte(AddrPort, 0x87)    // Must write twice to enter Extended mode

<Select Logic Device>
WriteByte(AddrPort, 0x07)
WriteByte(dataPort, 0x06)    // Select logic device 06h

WriteByte(AddrPort, 0x60)    // Select configuration register 60h
WriteByte(DataPort, (ReadByte(DataPort) | 0x03))

WriteByte(AddrPort, 0x61)    // Select configuration register 61h
WriteByte(DataPort, (ReadByte(DataPort) | 0x20))

<Leave the Extended Function Mode>
WriteByte(AddrPort, 0xAA)
```

Cincoze default GPIO Port base address is 0xA00h

5.1.1.6 DATA Bit Table (DIO)

7	6	5	4	3	2	1	0	bit
0	0	0	0	0	0	0	1	value
0				1				/h

= DI1

7	6	5	4	3	2	1	0	bit
0	0	0	0	0	0	0	1	value
0				1				/h

= DO1

7	6	5	4	3	2	1	0	bit
0	0	0	0	0	0	1	0	value
0				2				/h

= DI2

7	6	5	4	3	2	1	0	bit
0	0	0	0	0	0	1	0	value
0				2				/h

= DO2

7	6	5	4	3	2	1	0	bit
0	0	0	0	0	1	0	0	value
0				4				/h

= DI3

7	6	5	4	3	2	1	0	bit
0	0	0	0	0	1	0	0	value
0				4				/h

= DO3

7	6	5	4	3	2	1	0	bit
0	0	0	0	1	0	0	0	value
0				8				/h

= DI4

7	6	5	4	3	2	1	0	bit
0	0	0	0	1	0	0	0	value
0				8				/h

= DO4

7	6	5	4	3	2	1	0	bit
0	0	0	1	0	0	0	0	value
1				0				/h

= DI5

7	6	5	4	3	2	1	0	bit
0	0	0	1	0	0	0	0	value
1				0				/h

= DO5

7	6	5	4	3	2	1	0	bit
0	0	1	0	0	0	0	0	value
2				0				/h

= DI6

7	6	5	4	3	2	1	0	bit
0	0	1	0	0	0	0	0	value
2				0				/h

= DO6

7	6	5	4	3	2	1	0	bit
0	1	0	0	0	0	0	0	value
4				0				/h

= DI7

7	6	5	4	3	2	1	0	bit
0	1	0	0	0	0	0	0	value
4				0				/h

= DO7

7	6	5	4	3	2	1	0	bit
1	0	0	0	0	0	0	0	value
8				0				/h

= DI8

7	6	5	4	3	2	1	0	bit
1	0	0	0	0	0	0	0	value
8				0				/h

= DO8

5.1.1.7 DIO I/O Port Address

DI8	DI7	DI6	DI5	DI4	DI3	DI2	DI1	DO8	DO7	DO6	DO5	DO4	DO3	DO2	DO1	Pin Definition
7	6	5	4	3	2	1	0	7	6	5	4	3	2	1	0	Data Bits
DI								DO								DIO
0xA03								0xA02								I/O Port address

5.2 P2102 Digital I/O (DIO) Hardware Specification

- XCOM+ / 2XCOM+ : Isolated power in V+
- XCOM- / 2XCOM- : Isolated power in V-
- Isolated power in DC voltage : 9~30V
- 8x / 16x Digital Input (Source Type)
- Input Signal Voltage Level
  - Signal Logic 0 : XCOM+ = 9V, Signal Low - V- < 1V
    XCOM+ > 9V, V+ - Signal Low > 8V
  - Signal Logic 1 : > XCOM+ - 3V
- Input Driving Sink Current :
  - Minimal : 1 mA
  - Normal : 5 mA
- 8x / 16x Digital Output (Open Drain)
  - DO Signal have to pull up resistor to XCOM+ for external device, the resistance will affect the pull up current
  - Signal High Level : Pull up resistor to XCOM+
  - Signal Low Level : = XCOM-
  - Sink Current: 1A (Max)

5.2.1 P2102 DIO Connector Definition

DIO-1/DIO-2 : Digital Output / Input Connector

Connector Type: Terminal Block 2X10 10-pin, 3.5mm pitch

Location	Pin	Definition
DIO-1	1	DC INPUT
	2	DO1
	3	DO2
	4	DO3
	5	DO4
	6	DO5
	7	DO6
	8	DO7
	9	DO8
	10	GND

Location	Pin	Definition
DIO-2	1	DC INPUT
	2	DI1
	3	DI2
	4	DI3
	5	DI4
	6	DI5
	7	DI6
	8	DI7
	9	DI8
	10	GND

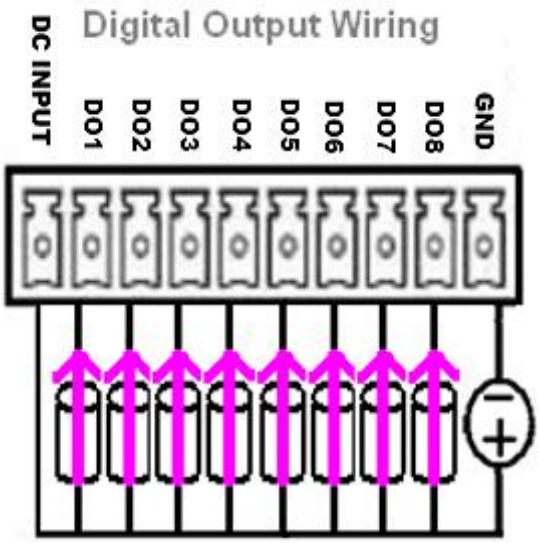

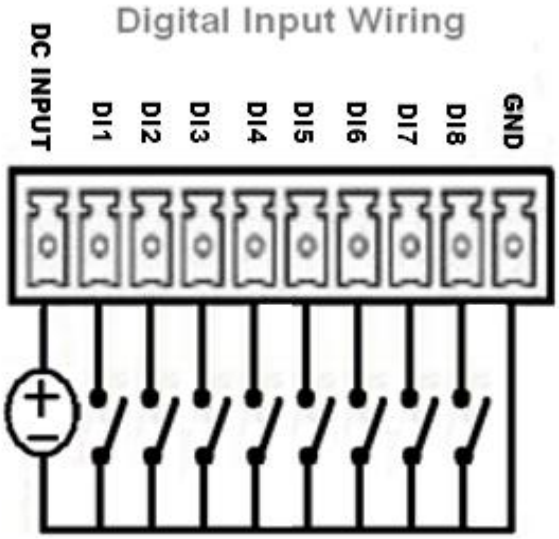

Reference Input Circuit

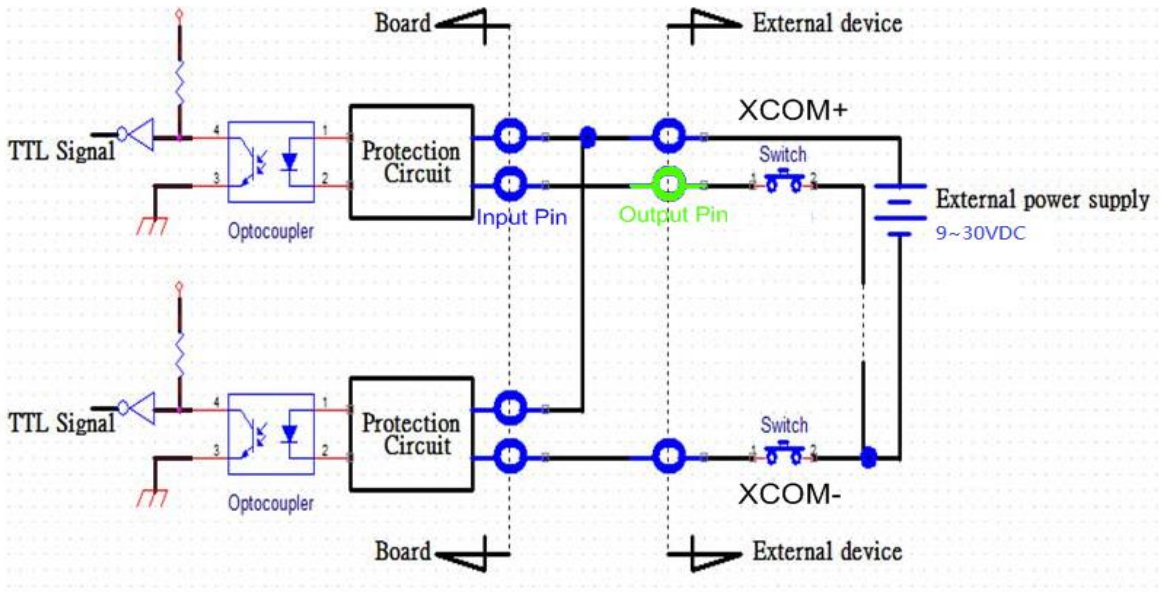

Reference Output Circuit

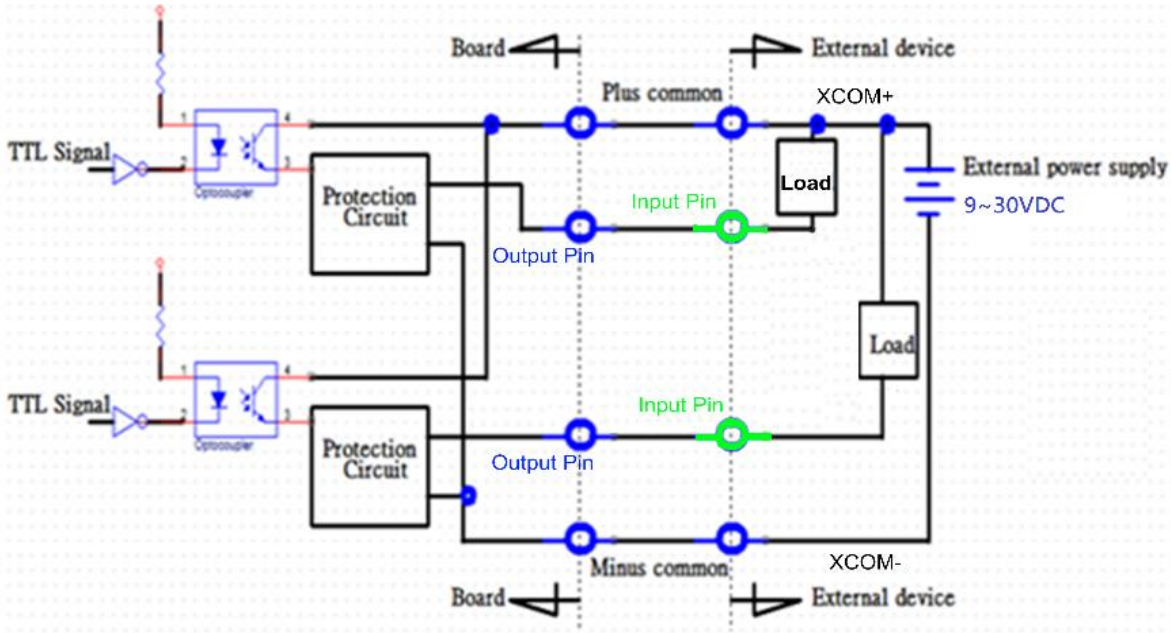

Chapter 6
Optional Modules & Accessories

6.1 Pin Definition and Settings of IGN Module

SW2 on CFM-IGN101: IGN Module Timing Setting Switch

Set shutdown delay timer when ACC is turned off

Pin 1	Pin 2	Pin 3	Pin 4	Definition
ON (IGN enabled) / OFF (IGN disabled)	ON	ON	ON	0 second
	ON	ON	OFF	1 minute
	ON	OFF	ON	5 minutes
	ON	OFF	OFF	10 minutes
	OFF	ON	ON	30 minutes
	OFF	ON	OFF	1 hour
	OFF	OFF	ON	2 hours
	OFF	OFF	OFF	Reserved (0 second)

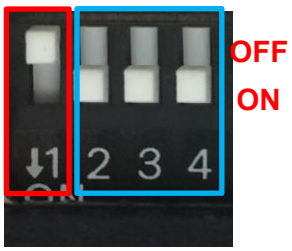

Default setting of Pin1 to Pin4 is OFF/ON/ON/ON.

24V_12V_1: IGN Module Voltage Mode Setting Switch

12V / 24V Car Battery Switch

Pin	Definition
1-2	24V Car Battery Input (Default)
2-3	12V Car Battery Input

6.2 Installing CFM-IGN Module

1. Locate the power Ignition connector on system motherboard as indicated.

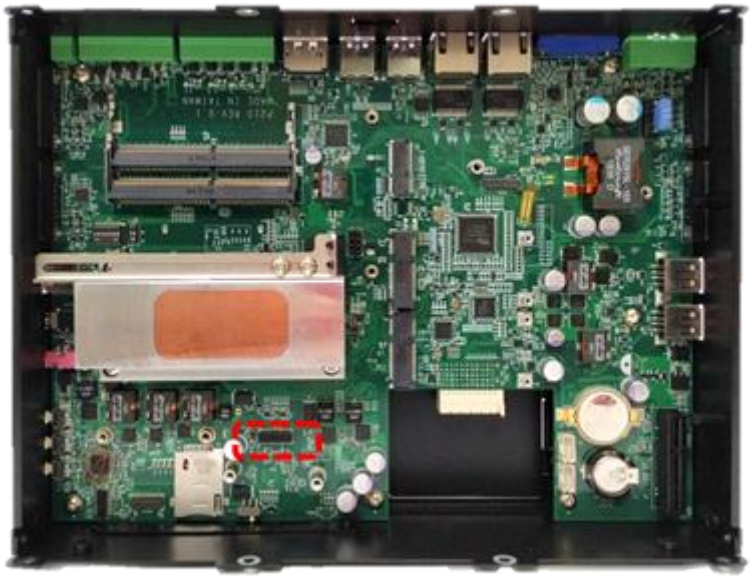

2. Insert the female connector of power ignition board to the male connector on system motherboard.

3. Fasten two screws to secure the power ignition board.

6.3 Installing CFM-PoE Module

This chapter takes CFM-PoE04 module for example.

1. Place a thermal pad on the top of the heatsink, and locate the two regions as marked.

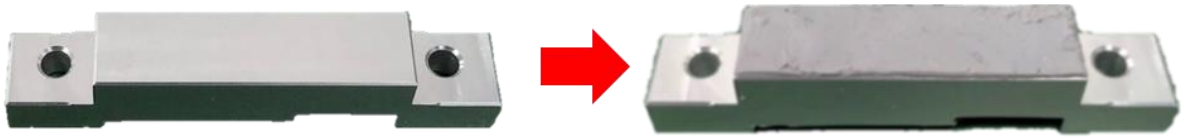

2. Turn over the heatsink and paste the thermal pad at the marked region.

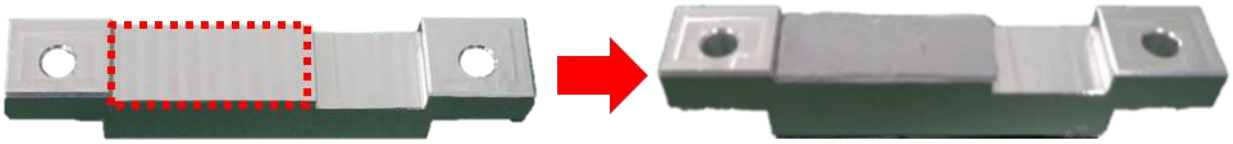

CAUTION

Before putting on the thermal block, please make sure the protective film on the Thermal Pad has been removed!

3. Paste the thermal pad onto the coil of the CFM-PoE module.

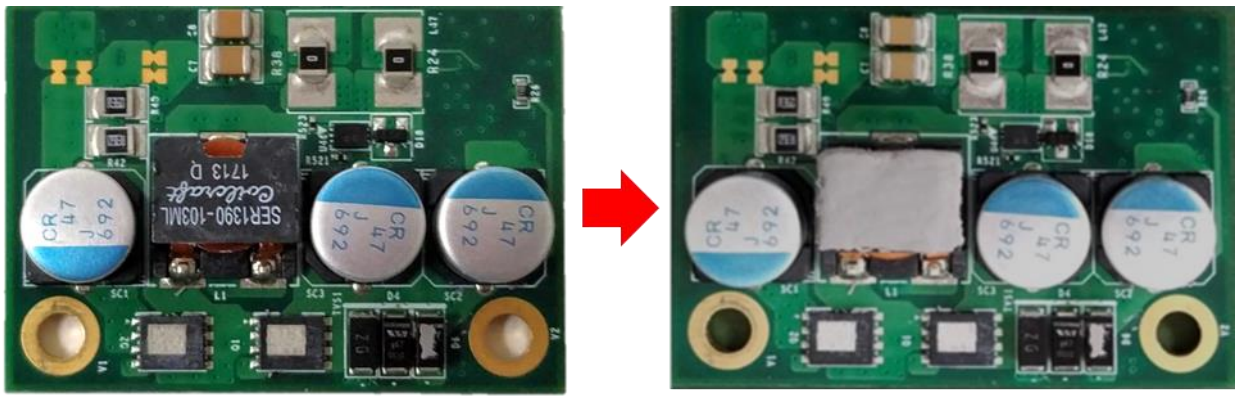

4. Locate the PoE connector on system motherboard as indicated.

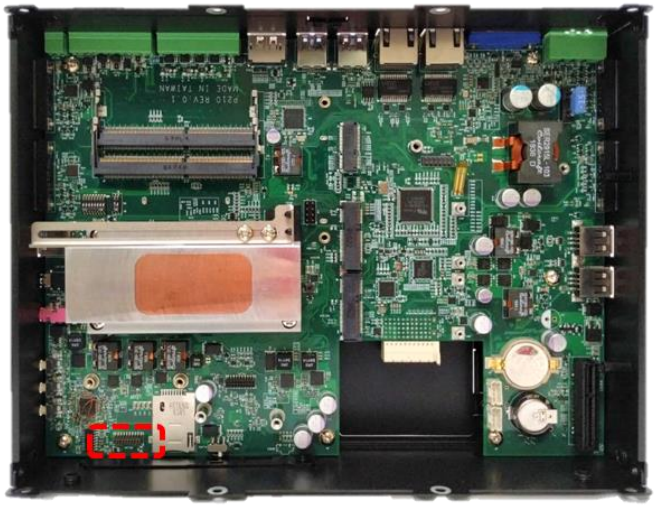

5. Insert the female connector of PoE daughter board to the male connector on system motherboard.

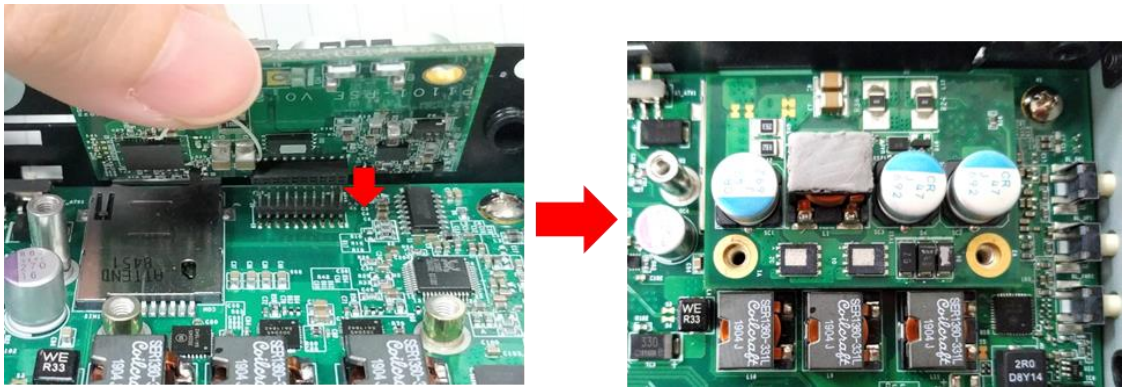

6. Put on the PoE thermal block and fasten two screws to secure the PoE board.

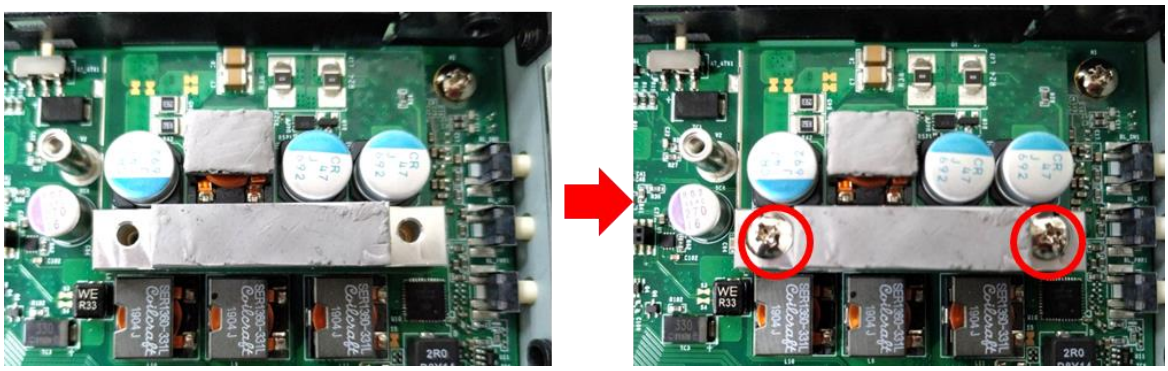

CAUTION

Before assembling the system's chassis cover, please make sure the protective films on the Thermal Pads have been removed!

6.4 Installing VESA Mount

The following picture indicates VESA mounting hole pattern on P2102, which is compliant with VESA mounting standard.

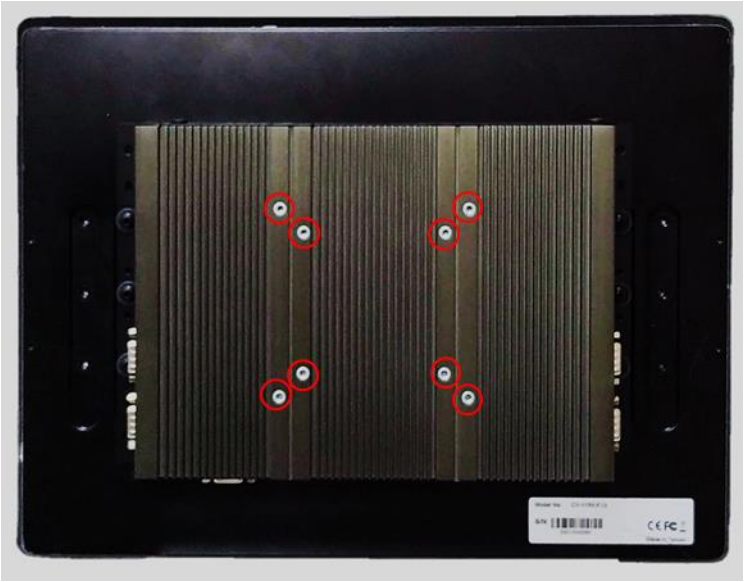

1. The following picture uses a panel PC (P2102+CV/CS display module) as a demonstration. To attach the panel PC to a VESA stand, please fasten eight screws as indicated to fix it on the stand.

6.5 Installing Rack Mount

1. Locate the screw holes on the PC or monitor module. Then fasten 8 screws (M4x6) as indicated to fix it on the rack mount base.

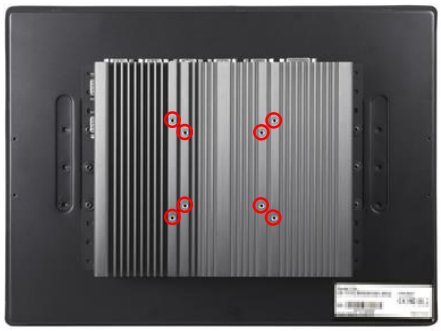

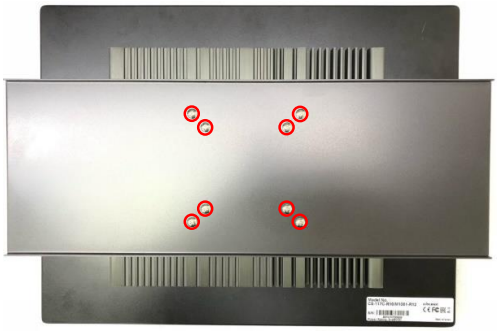

2. Assemble two rack mount brackets by fastening 4 screws (M5x6) at each side.

   For 8.4” ~ 17” Panel PC

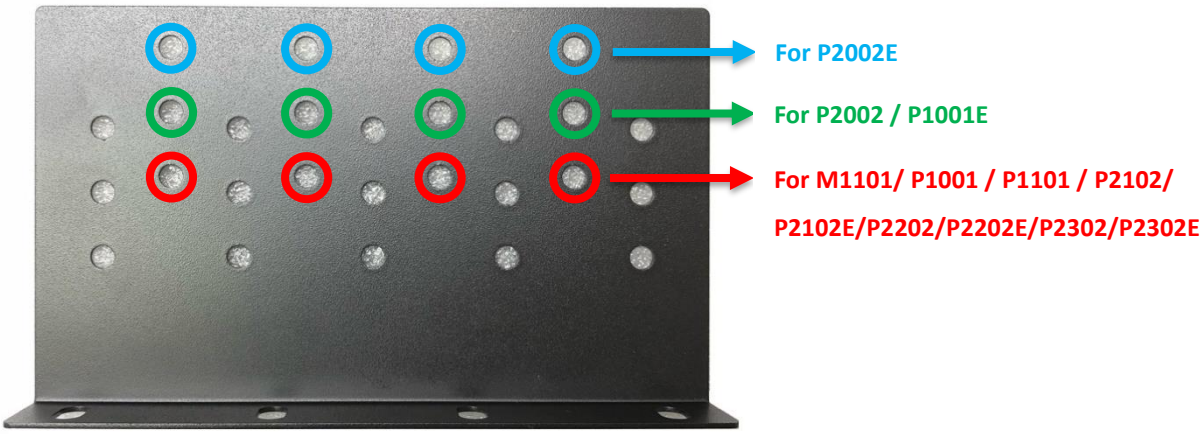

Left Side

Right Side

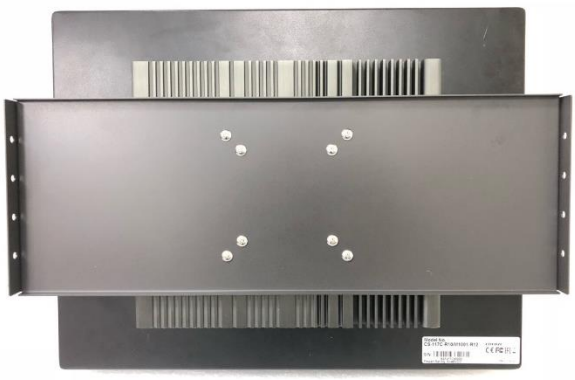

Bottom Side

For 19” ~ 24” Panel PC

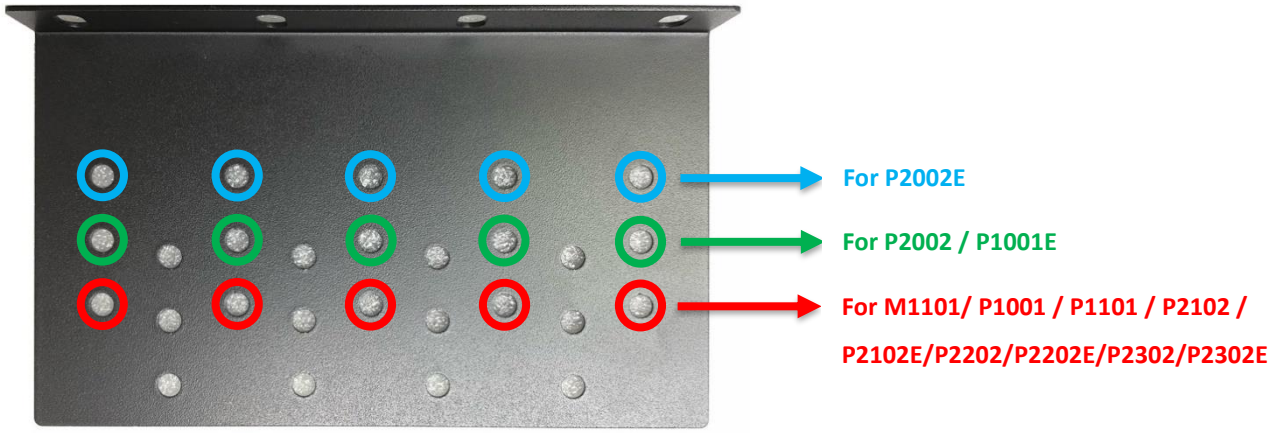

Left Side

Right Side

Bottom Side

3. Assemble two rack mount brackets by fastening 4 screws (M5x12), flat washers and hex nuts at each side.

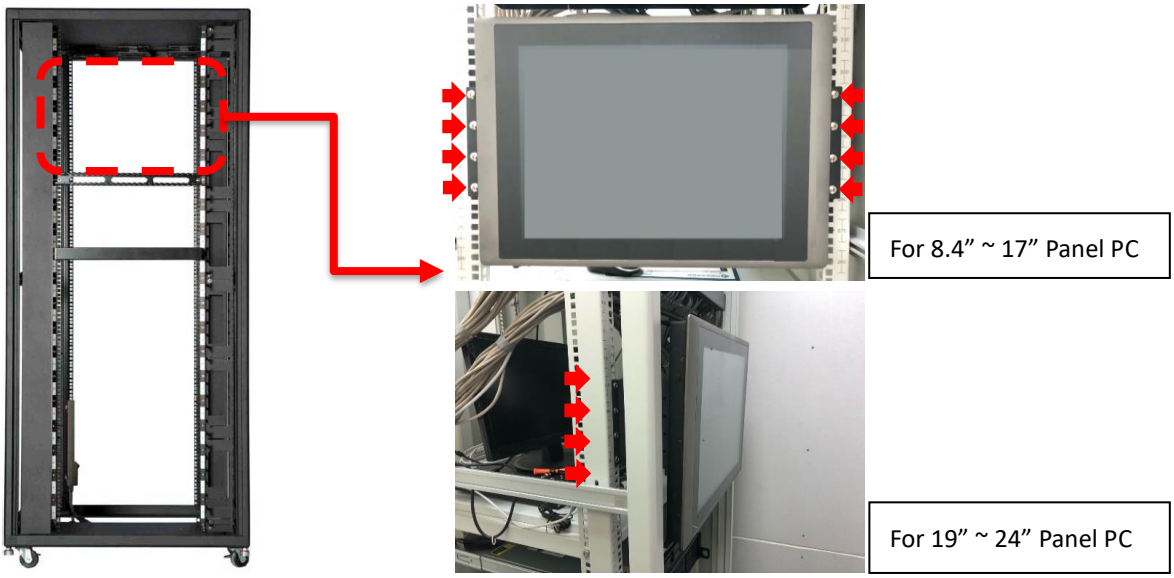

© 2019 Cincoze Co., Ltd. All rights reserved.

The Cincoze logo is a registered trademark of Cincoze Co., Ltd.

All other logos appearing in this catalog are the intellectual property of the respective company, product, or organization associated with the logo.

All product specifications and information are subject to change without notice.