DX-1100

9/8th Generation Intel® Xeon® and Core™ Processors, Extreme Performance, Compact and Modular Rugged Workstation

Overview

CONTACT

The Cincoze DX-1100 is a rugged workstation specifically designed to satisfy demands for the high-performance computing platform. Based on LGA 1151 socket and Intel® C246 chipset, the system supports 9/8th Generation Intel Xeon® and Core™ processors (formerly codenamed Coffee Lake S) with up to 8 cores and 64GB memory capacity. Despite its remarkably compact size, the DX-1100 still delivers the maximum flexibility of modular I/O expansions and provides dual hot-swap 2.5" HDD/SSD tray with RAID function. Thanks to Cincoze' exclusive CFM (Control Function Module) technologies, the DX-1100 can be configured instantly with Power over Ethernet and power ignition sensing functions to be applied in many industrial applications, such as machine vision, in-vehicle transportation, and mobile surveillance. Featuring rugged construction, fanless/cable-less/jumper-less design, wide operating temperature (-40 to +70°C), wide range DC power input (9~48 VDC), high tolerance to vibration and shock (5/50 Grms), the DX-1100 is maintenance-free and ideal to be deployed in harsh environments.

Key Features

- Supports 9/8th Generation Intel® Xeon® and Core™ Octa-core Processor
- Triple Independent Display with 4K/2K UHD Resolution (HDMI / DP / DVI-I)
- 2x 2.5" Hot Swap SATA HDD/SSD Tray, 3x mSATA Socket
- 2x USB 3.1 (10Gb/s) for Ultimate Data-transfer Speed
- 1x M.2 E Key Socket (CNVi), 3x Full-size Mini-PCIe Socket, 1x SIM Card Socket
- Supports CMI Interface for I/O Expandability
- Supports PoE+ and Power Ignition Sensing (with optional CFM modules)
- Wide Operating Temperature -40°C to 70°C
- E-Mark (E13, No.10R-0515210), LVD EN62368-1, EN50121-3-2

Certifications

EN50121-3-2 E13 FC CE MEC TECHNOLOGY CMI TECHNOLOGY CFM TECHNOLOGY

Workstation Performance & Compact

Supporting 9/8th Generation Intel® Xeon® E-series processors (up to 8-core), the DX-1100 delivers workstation performance available in a compact size for multi-task applications and space-limited environments.

Modular Computing

Based on Cincoze' trusted, innovative, and reliable modular design, the DX-1100 brings the maximum flexibility and allows users to configure I/O interfaces according to specific application requirements.

Application-driven Functions

Capable of application-ready functions, such as PoE, power ignition, power over serial, RAID, M12 connection, and Multi-LAN, the DX1100 can speed up your application deployment and reduce the overall integration cost.

Specifications

Model Name	DX-1100
System	
Processor	▪ 9th Generation Intel® Coffee Lake-R S Series CPU: - Intel® Xeon® E-2278GEL 8 Cores Up to 3.9 GHz, TDP 35W - Intel® Core™ i7-9700E 8 Cores Up to 4.4 GHz, TDP 65W - Intel® Core™ i5-9500E 6 Cores Up to 4.2 GHz, TDP 65W - Intel® Core™ i3-9100E 4 Cores Up to 3.7 GHz, TDP 65W - Intel® Core™ i7-9700TE 8 Cores Up to 3.8 GHz, TDP 35W - Intel® Core™ i5-9500TE 6 Cores Up to 3.6 GHz, TDP 35W - Intel® Core™ i3-9100TE 4 Cores Up to 3.2 GHz, TDP 35W ▪ 8th Generation Intel® Coffee Lake S Series CPU: - Intel® Xeon® E-2176G 6 Cores Up to 4.7 GHz - 12M Cache, TDP 80W - Intel® Xeon® E-2124G 4 Cores Up to 4.5 GHz - 8M Cache, TDP 71W - Intel® Core™ i7-8700 6 Cores Up to 4.6 GHz - 12M Cache, TDP 65W - Intel® Core™ i5-8500 6 Cores Up to 4.1 GHz - 9M Cache, TDP 65W - Intel® Core™ i3-8100 4 Cores 3.6 GHz - 6M Cache, TDP 65W - Intel® Core™ i7-8700T 6 Cores Up to 4.0 GHz - 12M Cache, TDP 35W - Intel® Core™ i5-8500T 6 Cores Up to 3.5 GHz - 9M Cache, TDP 35W - Intel® Core™ i3-8100T 4 Cores 3.1 GHz - 6M Cache, TDP 35W - Intel® Pentium® G5400 2 Cores 3.7 GHz - 4M Cache, TDP 58W - Intel® Pentium® G5400T 2 Cores 3.1 GHz - 4M Cache, TDP 35W - Intel® Celeron® G4900 2 Cores 3.1 GHz - 2M Cache, TDP 54W - Intel® Celeron® G4900T 2 Cores 2.9 GHz - 2M Cache, TDP 35W
Chipset	Intel® C246
BIOS	▪ AMI 32 MB BIOS
Memory	▪ 2x DDR4-2666/2400 MHz SO-DIMM Sockets ▪ Support up to 64 GB (Un-buffered and Non-ECC type) * i3/Pentium/Celeron: DDR4 2400 MHz
Graphics	
Graphics Engine	▪ Integrated Intel® UHD Graphics (Xeon: UHD P630; i7/i5/i3: UHD 630; Pentium/Celeron: UHD 610) ▪ Supports Triple Independent Display (DVI-I/DisplayPort/HDMI)
Audio	
Audio Codec	▪ Realtek® ALC888, High Definition Audio
I/O	
Connector	▪ 1x DVI-I Connector (VGA: 1920 x1080 @ 60 Hz; DVI-D: 1920 x1200 @ 60 Hz)
DisplayPort	▪ 1x DisplayPort Connector (4096 x 2304 @ 60Hz, According to CPU Specifications)
HDMI	▪ 1x HDMI Connector (3840 x 2160 @30Hz)
LAN	▪ 2x GbE LAN (Support WoL, Teaming, Jumbo Frame, IEEE 1588v2 and PXE), RJ45 - GbE1: Intel® I219-LM - GbE2: Intel® I210
Flow Control	▪ 4x RS-232/422/485 with Auto Flow Control (Support 5V/12V), DB9
USB	▪ 2x USB 3.2 Gen2x1 (10Gbps) ▪ 6x USB 3.2 Gen1x1 (5Gbps)
Mic-in	▪ 1x Line-out & 1x Mic-in, Phone Jack 3.5mm
ATX Power	▪ 1x ATX Power On/Off Button
Reset Button	▪ 1x Reset Button
Mode Switch	▪ 1x AT/ATX Mode Switch
CMOS Switch	▪ 1x Clear CMOS Switch

Remote Power On/Off Connector	▪ 1x Remote Power On/Off Connector, 2-pin Terminal Block
Terminal Block	▪ 1x External FAN Connector, 4-pin Terminal Block (Supports Smart Fan by BIOS)
Storage	
HDD/SSD	▪ 2x 2.5" Front Accessible SATA HDD/SSD Bay (SATA 3.0)
mSATA	▪ 3x mSATA Socket (SATA 3.0, shared by Mini-PCIe socket)
RAID	▪ Supports S/W RAID 0, 1, 5 & 10
Expansion	
CFM (Control Function Module) Interface	▪ 1x Control Function Module (CFM) Interface
CMI (Combined Multiple I/O) Interface	▪ 2x Combined Multiple I/O (CMI) High Speed Interface ▪ 1x Combined Multiple I/O (CMI) Low Speed Interface
M.2 E Key Socket	▪ 1x M.2 2230 Socket (Key E), supports WiFi/Bluetooth module or BIOS Selectable Intel® CNVi (Integrated WiFi/Bluetooth)
Mini-PCIe	▪ 3x Full-size Mini-PCIe Socket
SIM Socket	▪ 1x SIM Socket
Antenna Hole	▪ 3x Antenna Hole
Other Function	
Instant Reboot	▪ Supports Instant Reboot Technology (0.2 sec)
CMOS	▪ SuperCap Integrated for CMOS Battery Maintenance-free Operation
Watchdog Timer	▪ Software Programmable Supports 256 Levels System Reset
Power Requirement	
Power Type	▪ AT / ATX
Power Supply Voltage	▪ 9~48VDC
Terminal Block	▪ 1x 3-pin Terminal Block
Power Adapter	▪ Power Adapter AC/DC 24V/5A 120W or 24V/9.2A 220W (Optional)
Physical	
Dimension (W x D x H)	▪ 242 x 173 x 77 mm
Weight	▪ 3.6 kg
Construction	▪ Extruded Aluminum with Heavy Duty Metal
Mounting	▪ Wall mount / VESA mount / DIN Rail Mount / Side Mount
Physical Design	▪ Unibody Chassis ▪ Fanless Design ▪ Jumper-less Design ▪ Cable less Design
Protection	
Reverse Power Input Protection	▪ Yes
Over Voltage Protection	▪ Protection Range: 51~58V ▪ Protection Type: shut down operating voltage, re-power on at the preset level to recover
Over Current Protection	▪ 15A
Operating System	
Windows	▪ Windows® 10

Linux	▪ Supports by Project
Environment	
Operating Temperature	▪ 35W TDP Processor: -40°C to 70°C 54~65W TDP Processor: -40°C to 45°C 71~80W TDP Processor: -40°C to 40°C * PassMark BurnInTest: 100% CPU, 2D/3D Graphics (without thermal throttling) * With extended temperature peripherals; Ambient with air flow * According to IEC60068-2-1, IEC60068-2-2, IEC60068-2-14 * Comply with EN50155 dry heat thermal test (85°C for 10 minutes)
Storage Temperature	▪ -40°C to 85°C
Relative Humidity	▪ 95% RH @ 40°C (Non-condensing)
Shock	▪ IEC60068-2-27: Operating, 50 Grms, Half-sine 11 ms Duration, w/ SSD ▪ IEC/EN61373: Operating, 50 Grms, Half-sine 30 ms Duration, w/ SSD
Vibration	▪ IEC60068-2-64: Operating, 5 Grms, 5-500 Hz, 3 Axes, w/ SSD ▪ IEC/EN61373: Operating, 1 Grms, 5-150 Hz, 3 Axes, w/ SSD
MTBF	▪ 407,391 Hours - Database: Telcordia SR-332 Issue3, Method 1, Case 3
EMC	▪ CE, UKCA, FCC, ICES-003 Class A ▪ E-mark
EMI	▪ CISPR 32 Conducted & Radiated: Class A ▪ EN/BS EN 50121-3-2 Conducted & Radiated: Class A ▪ EN/BS EN IEC 61000-3-2 Harmonic current emissions: Class A ▪ EN/BS EN61000-3-3 Voltage fluctuations & flicker ▪ FCC 47 CFR Part 15B, ICES-003 Conducted & Radiated: Class A
EMS	▪ EN/IEC 61000-4-2 ESD: Contact: 6 kV; Air: 8 kV ▪ EN/IEC 61000-4-3 RS: 80 MHz to 1000 MHz: 20 V/m ▪ EN/IEC 61000-4-4 EFT: AC Power: 2 kV; Signal: 2 kV ▪ EN/IEC 61000-4-5 Surges: AC Power: 2 kV ▪ EN/IEC 61000-4-6 CS: 10V ▪ EN/IEC 61000-4-8 PFMF: 50 Hz, 1A/m ▪ EN/IEC 61000-4-11 Voltage Dips & Voltage Interruptions: 0.5 cycles at 50 Hz
Safety	▪ LVD IEC/EN 62368-1
Railway	▪ EMC: EN 50155: 2007 / AC: 2012 Clause 5.4, 5.5 - EN 50121-1: 2017 - EN 50121-3-2: 2016 ▪ Simulated Long Life Test: EN 50155: 2017 Clause 13.4.11.2 - IEC 61373 Edition 2.0: 2010, Category 1, Class B-Body mounted: Operating ▪ Vibration: EN 50155: 2017 Clause 13.4.11.4 - IEC 61373 Edition 2.0: 2010, Category 1, Class B-Body mounted: Operating ▪ Shock: EN 50155: 2017 Clause 13.4.11.3 - IEC 61373 Edition 2.0: 2010, Category 1, Class B-Body mounted: Operating ▪ Dry Heat Thermal Test EN 50155: 2017 Clause 13.4.5.3 - Thermal Test Cycle: B - Operating Temperature: OT4 (-40°C to 70°C), 85°C (for 10 minutes)
Fire Protection	▪ EN 45545-2

External Layout

Front I/O

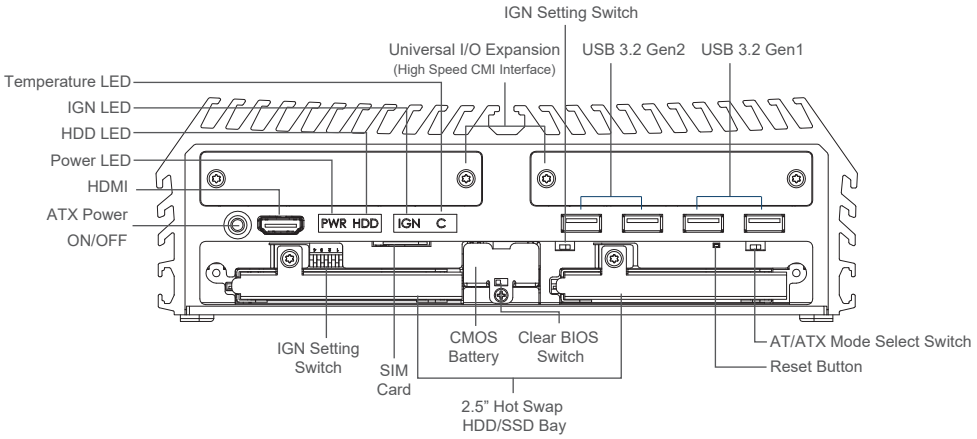

Rear I/O

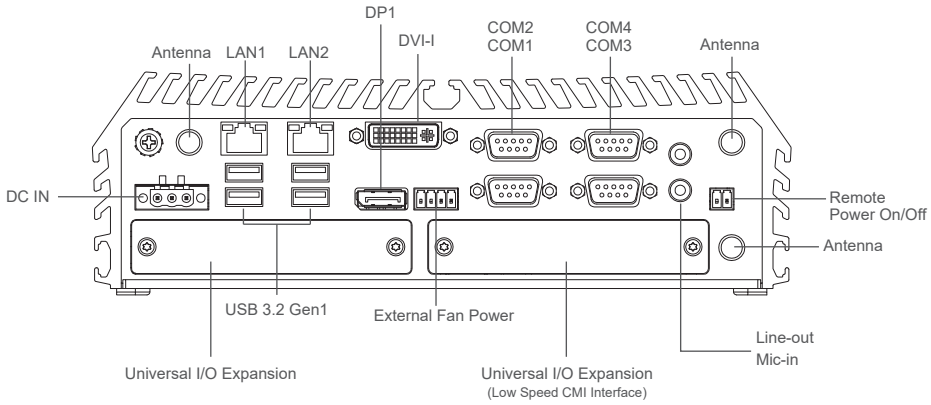

Dimensions

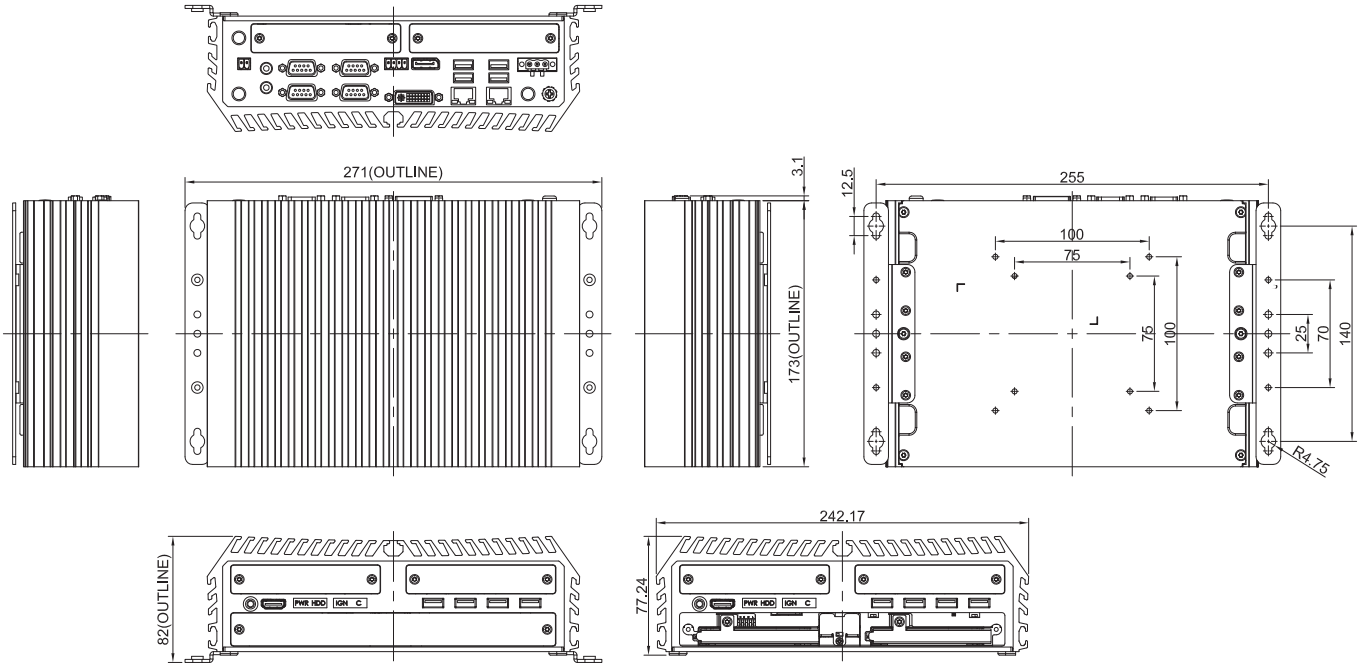

Unit: mm

Ordering Information

Available Models

Model No.	Description
DX-1100-R10	9/8th Generation Intel® Xeon® and Core™ Processors, Extreme Performance, Compact and Modular Rugged Workstation

Package Checklist

- DX-1100 Rugged Workstation x 1
- CPU Heatsink Pack x 1
- Screw Pack x 1
- Wall Mounting Kit x 1
- Power Terminal Block Connector x 1
- Remote Power On/Off Terminal Block Connector x 1
- Fan Terminal Block Connector x 1
- DVI-I to VGA Adaptor x 1

Optional Modules & Accessories

Model No.	Description
CFM-PoE01	CFM Module with PoE Control Function, Individual Port 25.5W
CFM-IGN01	CFM Module with Power Ignition Sensing Control Function, 12V/24V Selectable
CMI-LAN01-R12/UB0912	CMI Module with 4x Intel I210 GbE LAN, RJ45 Port / 1x Universal Bracket with 4x RJ45 Cutout for DX Series
CMI-M12LAN01-R12/UB0910	CMI Module with M12 Connector, 4x Intel GbE LAN / 1x Universal Bracket with 4x M12 Cutout for DX Series
CMI-XM12LAN01-R10/UB0930-R10	CMI Module with M12 X-Coded Connector, 4x Intel I210 GbE LAN Ports / Universal Bracket with 4x M12 X-Coded Cutout for DX Series
CMI-DIO01/UB0918	CMI Module with 16DIO (8in 8out) / 1xUniversal Bracket with DIO Cutout for DX Series
CMI-COM01/UB0903	CMI Module with 2x RS232/422/485 (Support 5V/12V) / 1x Universal Bracket with 2x DB9 Cutout for DX Series
MEC-COM-M212-TDB9/UB0903	Mini-PCIe Module with 2x RS-232 Serial Ports, 1x Thin DB9 Cable / 1x Universal Bracket with 2x DB9 Cutout for DX Series
MEC-COM-M334-TDB9/2xUB0903	Mini-PCIe Module with 4x RS-232/422/485 Serial Ports, 2x Thin DB9 Cable / 2x Universal Bracket with 2x DB9 Cutout for DX Series
MEC-LAN-M102-30/UB0911	Mini-PCIe Module with 2x LAN Ports, 2x 30cm cable / 1x Universal Bracket with 2x RJ45 Cutout for DX Series
UB0932-R10	Universal Bracket with 3x Antenna Cutout
GST120A24-CIN	Adapter AC/DC 24V 5A 120W, with 3pin Terminal Block Plug 5.0mm Pitch, with TUBES, level VI
GST220A24-CIN	Adapter AC/DC 24V 9.2A 220W, with 3pin Terminal Block Plug 5.0mm Pitch, with TUBES, level VI
GST360A24-CIN	Adapter AC/DC 24V 15A 360W with 3pin Terminal Block Plug and TUBES, Level VI
RSD-200D-24	Railway Single Output DC-DC Converter 200W / DC 24V
FAN-EX101	External Fan with 4pin Terminal Block Plug and Mounting Bracket, Support smart fan
SIDE-DX	DX Series side mount kit
DIN01	DIN-RAIL Mount Kit, KMRH-K175

Optional Module Configuration

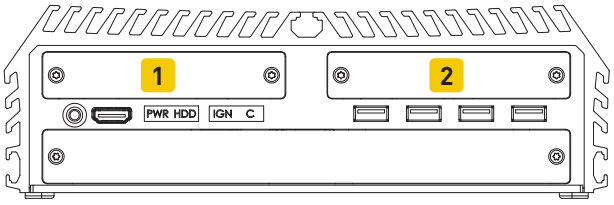

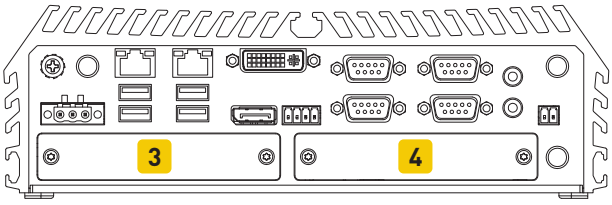

Model No.	Description	1	2	3	4
CFM-PoE01	CFM Module with PoE Control Function, Individual Port 25.5W	V	V	-	-
CMI-LAN01-R12/UB0912	CMI Module with 4x Intel I210 GbE LAN, RJ45 Port / 1x Universal Bracket with 4x RJ45 Cutout for DX Series	V	V	-	-
CMI-M12LAN01-R12/UB0910	CMI Module with M12 Connector, 4x Intel GbE LAN / 1x Universal Bracket with 4x M12 Cutout for DX Series	V	V	-	-
CMI-XM12LAN01-R10/UB0930-R10	CMI Module with M12 X-Coded Connector, 4x Intel I210 GbE LAN Ports / Universal Bracket with 4x M12 X-Coded Cutout for DX Series	V	V	-	-
CMI-DIO01/UB0918	CMI Module with 16DIO (8in 8out) / 1xUniversal Bracket with DIO Cutout for DX Series	-	-	-	V
CMI-COM01/UB0903	CMI Module with 2x RS232/422/485 (Support 5V/12V) / 1x Universal Bracket with 2x DB9 Cutout for DX Series	-	-	-	V
MEC-COM-M212-TDB9/UB0903	Mini-PCIe Module with 2x RS-232 Serial Ports, 1x Thin DB9 Cable / 1x Universal Bracket with 2x DB9 Cutout for DX Series	V	V	V	V
MEC-COM-M334-TDB9/2xUB0903	Mini-PCIe Module with 4x RS-232/422/485 Serial Ports, 2x Thin DB9 Cable / 2x Universal Bracket with 2x DB9 Cutout for DX Series	V	V	V	V
MEC-LAN-M102-30/UB0911	Mini-PCIe Module with 2x LAN Ports, 2x 30cm cable / 1x Universal Bracket with 2x RJ45 Cutout for DX Series	-	-	V	-
UB0932-R10	Universal Bracket with 3x Antenna Cutout	V	V	V	V

V : Compatible

Updated: Feb. 5, 2025.

© Cincoze Co., Ltd. All Rights Reserved. Specifications subject to change without notice.
All product names, logos, and brands are the property of their respective owners. All company, product and service names used in this document are for identification purposes only. The use of these names, logos, and brands does not imply endorsement.