CV-W115FH/P2002 Series

15.6 " TFT-LCD FHD 16:9 6th Gen. Intel® Core™ Processor U Series Fanless Touch Panel PC with CFM & CDS Technology



HIGH PERFORMANCE INDUSTRIAL PANEL PC

| CV-100/P2000 Series |

Overview

CONTACT

Cincoze CV-W115FH/P2002 Series is a 15.6" high performance fanless and jumperless rugged touch panel PC powered by Intel® 6th generation Core™ processor U series, offering more computing power, faster data processing and a 40% boost to graphics performance, while consuming only 15W of power. The CV-W115FH/P2002 Series supports CFM (Control Function Module) Technology, Cincoze own defined interface with integrated power boost and control signal that allows you to extend PoE and ignition sensing functions with additional CFM boards. In addition Cincoze offers a full series of Mini-PCIe Expansion I/O Card (MEC) for adding extra I/O through the universal bracket. The CV-W115FH/P2002 Series comes with the slim version, and the expandable version (PCI/PCIe card expansion) made with outstanding modular design concept for the greatest flexibility to fulfill the versatile industrial applications. The CV-W115FH/P2002 Series is a truly rugged computing system supporting wide operating temperature, wide range DC input from 9V to 48V, and various kinds of industrial protections. Moreover the instant reboot circuit design allows the system to cope with critical power request for factory applications. The CV-W115FH/P2002 Series has an integrated SuperCap to avoid high downtime cost of replacing CMOS battery and be absolutely maintenance-free.

Key Features

- 15.6" TFT-LCD FHD 16:9 with Resistive 5-wire / Projected Capacitive Touch
- Onboard Intel® 6th Generation Core™ Processor U Series (15W)
- 2x DDR4 SO-DIMM Socket, Support Up to 32 GB
- Integrated Intel® HD Graphics 520 Support Triple Display
- 2x 2.5" SATA HDD Bay, 1x mSATA and 1x CFast Socket
- IP65 Compliant Aluminum Die-Cast Front Frame
- 2x Full-size Mini-PCIe Socket for Wireless and I/O Expansion
- Support CFM Technology for PoE and Ignition Sensing Functions
- Rich I/O (2x GbE LAN, 6x COM, 5x USB, 16x Isolated DIO)
- Support Instant Reboot Technology
- Wide Operating Temperature
- SuperCap integrated for CMOS Battery Maintenance-Free
- PCI/PCIe Expandable Version Available (For P2002E only)

Certifications

IP65 FC CE

CV-W115FH Series Specifications

Model Name	CV-W115FHR	CV-W115FHC
Display		
LCD Size	▪ 15.6" (16:9)	
Max. Resolution	▪ 1920 x 1080 (Full HD)	
Brightness (cd/m2)	▪ 350	
Contrast Ratio	▪ 800 : 1	
LCD Color	▪ 16.7M	
Pixel Pitch (mm)	▪ 0.17925(H) x 0.17925 (W)	
Viewing Angle (H-V)	▪ 178 / 178	
Backlight LED Life Time	▪ 50,000 hrs (LED Backlight)	
Touch Screen		
Touch Type	▪ Resistive 5-wire	▪ Projected Capacitive
Wet Touch Tracking		v
Physical		
Dimension (W x D x H)	▪ 420 x 254 x 66.2 mm	
Weight Information	▪ 3.78kg	▪ 3.84kg
Mechanical Construction	▪ Die-Casting Flat Surface	
Power		
Power Consumption	▪ 11.5W (Max.)	▪ 11.45W (Max.)
Environment		
Front Panel Protection	▪ IP 65 Compliant	
Operating Temperature	▪ -20°C to 70°C (-4°F to 158°F) (With Industrial Grade peripherals; Ambient with air flow)	
Storage Temperature	▪ -30°C to 70°C (-22°F to 158°F)	
Relative Humidity	▪ 90% RH @ 40°C (Non-condensing)	
EMC	▪ CE, UKCA, FCC, ICES-003 Class A	
EMI	▪ CISPR 32 Conducted & Radiated: Class A ▪ EN/BS EN 55032 Conducted & Radiated: Class A ▪ EN/BS EN IEC 61000-3-2 Harmonic current emissions: Class A ▪ EN/BS EN61000-3-3 Voltage fluctuations & flicker ▪ FCC 47 CFR Part 15B, ICES-003 Conducted & Radiated: Class A	
EMS	▪ EN/IEC 61000-4-2 ESD: Contact: 4 kV; Air: 8 kV ▪ EN/IEC 61000-4-3 RS: 80 MHz to 1000 MHz: 3 V/m ▪ EN/IEC 61000-4-4 EFT: AC Power: 1 kV; DC Power: 0.5 kV; Signal: 0.5 kV ▪ EN/IEC 61000-4-5 Surges: AC Power: 2 kV; Signal: 1 kV ▪ EN/IEC 61000-4-6 CS: 3V ▪ EN/IEC 61000-4-8 PFMF: 50 Hz, 1A/m ▪ EN/IEC 61000-4-11 Voltage Dips & Voltage Interruptions: 0.5 cycles at 50 Hz	
Safety	▪ UL, cUL, CB, IEC, EN 62368-1	

P2002 Series Specifications

Model Name	P2002	P2002E
System		
Processor	▪ Onboard 6th Intel® Core™ U processors (Skylake) - Intel® Core™ i5-6300U processor (3M Cache, up to 3.00 GHz) - Intel® Core™ i3-6100U processor (3M Cache, 2.30 GHz) - TDP: 15 W	
Memory	▪ 2x DDR4 2133 MHz 260-Pin SO-DIMM Socket ▪ Support Un-buffered and Non-ECC Type up to 32 GB	
BIOS	▪ AMI 64Mbit SPI BIOS	
Graphics		
Graphics Engine	▪ Integrated Intel® UHD Graphics 520	
Maximum Display Output	▪ Supports Triple Independent Display	
CDS	▪ 1x CDS Connector for Cincoze Display Module	
VGA	▪ 1x VGA Connector(1920 x 1080 @60Hz), DB-15	
DVI-D	▪ 1x DVI-D Connector (1920 x 1080 @ 60Hz)	
Audio		
Audio Codec	▪ Realtek® ALC888, High-Definition Audio	
Speaker-out	▪ 1x Speaker-out, Phone Jack 3.5mm	
Mic-in	▪ 1x Mic-in, Phone Jack 3.5mm	
I/O		
LAN	▪ 2x GbE LAN (Supports WoL, Teaming, Jumbo Frame & PXE), RJ45 - GbE1: Intel® I219LM - GbE2: Intel® I210	
USB	▪ 4x USB 3.2 Gen1 (Type A), 1x USB 2.0 (Type A)	
Serial Port	▪ 6x RS-232/422/485 with Auto Flow Control Support 5V/12V, DB9	
DIO	▪ 16x Isolated Digital I/O (8in/8out), 10-Pin Terminal Block	
Storage		
SSD/HDD	▪ 2x 2.5" HDD/SSD Bay, Support RAID 0/1 (Gen3)	
mSATA	▪ 2x mSATA (One Shared by Mini-PCIe Socket) (Gen2)	
CFast	▪ 1x CFast Socket (Gen 3)	
Expansion		
Mini PCI Express	▪ 2x Full-size Mini-PCIe Sockets	
PCI Express		▪ 1x PCI or 1x PCIe x4 Expansion slot (with Optional Riser Card) ▪ maximum dimension of add-on card:100mm x 200mm (H x L)
SIM Socket	▪ 1 x Front Accessible SIM Socket	
Universal Bracket	▪ 1x Universal I/O Bracket	
CFM (Control Function Module) Interface	▪ 2x CFM Interface for optional CFM-IGN or CFM-PoE (max 25.5W) Module Expansion	
CDS (Convertible Display System) Technology	▪ 1x Convertible Display System (CDS) Interface, Compact PCI Connector	

Other Function		
Instant Reboot	▪ Support 0.2sec Instant Reboot technology	
Watchdog Timer	▪ Software Programmable Supports 256 Levels System Reset	
Internal Speaker	▪ AMP 2W + 2W	
OSD Function	▪ LCD On/Off, Brightness Up, Brightness Down	
Reset Button	▪ 1x Reset Button	
External Fan Connector	▪ 1x External Fan Connector, 4-pin Terminal Block	
Power		
Power Button	▪ 1x ATX Power On/Off Switch	
Power Mode Switch	▪ 1x AT/ATX Mode Switch	
Power Input	▪ 1x 3-pin Terminal Block Connector with Power Input 9~48VDC	
Power Adapter (Optional)	▪ 1x Optional AC/DC 12V/5A 60W or 24V/5A 120W ▪ 1x Optional AC/DC 24V/9.2A 220W (For P2002E only)	
Remote Power On/Off	▪ 1x Remote Power On/Off Connector, 2-pin Terminal Block	
Physical		
Dimension(W x D x H)	▪ 254.5 x 220 x 54mm	▪ 254.5 x 220 x 72 mm
Weight Information	▪ 2.92 kg	▪ 3.18 kg
Mechanical Construction	▪ Extruded Aluminum with Heavy Duty Metal	
Mounting	▪ Wall / VESA / CDS	
Physical Design	▪ Fanless Design ▪ Jumper-less Design	
Reliability & Protection		
Reverse Power Input	▪ Yes	
Over Voltage Protection	▪ Protection Range: 51~58V ▪ Protection Type: shut down operating voltage, re-power on at the present level to recover	
Over Current Protection	▪ 15A	
CMOS Battery Backup	▪ SuperCap Integrated for CMOS Battery Maintenance-free Operation	
Operating System		
Microsoft® Windows®	▪ Windows® 10, Windows® 8.1, Windows® 7	
Linux	▪ Linux® Kernel 4.4	
Environment		
Operating Temperature	▪ Ambient with Air Flow: -25°C to 70°C (with Extended Temperature Peripherals)	
Storage Temperature	▪ -40°C to 85C	
Relative humidity	▪ 95% RH @ 40˚C (Non-condensing)	
Shock	▪ Operating, 50 Grms, Half-sine 11ms Duration (w/ SSD, according to IEC60068-2-27)	
Vibration	▪ Operating, 5 Grms, 5-500 Hz, 3 Axes (w/ SSD, according to IEC60068-2-64)	
EMC	▪ CE, UKCA, FCC, ICES-003 Class A	

EMI	▪ CISPR 32 Conducted & Radiated: Class A ▪ EN/BS EN 55032 Conducted & Radiated: Class A ▪ EN/BS EN IEC 61000-3-2 Harmonic current emissions: Class A ▪ EN/BS EN61000-3-3 Voltage fluctuations & flicker ▪ FCC 47 CFR Part 15B, ICES-003 Conducted & Radiated: Class A
EMS	▪ EN/IEC 61000-4-2 ESD: Contact: 4 kV; Air: 8 kV ▪ EN/IEC 61000-4-3 RS: 80 MHz to 1000 MHz: 3 V/m ▪ EN/IEC 61000-4-4 EFT: AC Power: 1 kV; DC Power: 0.5 kV; Signal: 0.5 kV ▪ EN/IEC 61000-4-5 Surges: AC Power: 2 kV; Signal: 1 kV ▪ EN/IEC 61000-4-6 CS: 3V ▪ EN/IEC 61000-4-8 PFMF: 50 Hz, 1A/m ▪ EN/IEC 61000-4-11 Voltage Dips & Voltage Interruptions: 0.5 cycles at 50 Hz

CV-W115FH/P2002 External Layout

Front I/O

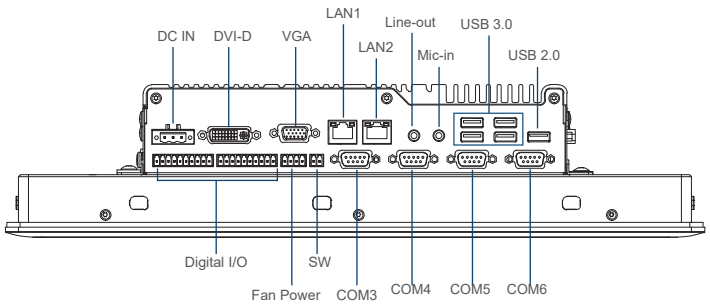

Rear I/O

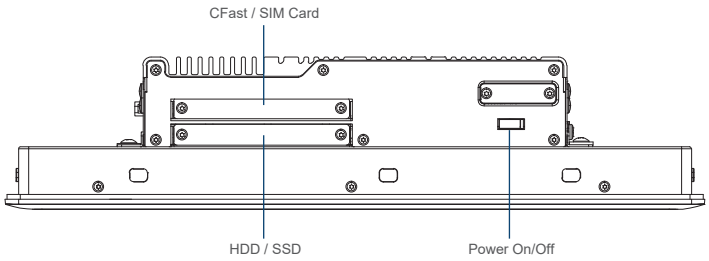

Left I/O

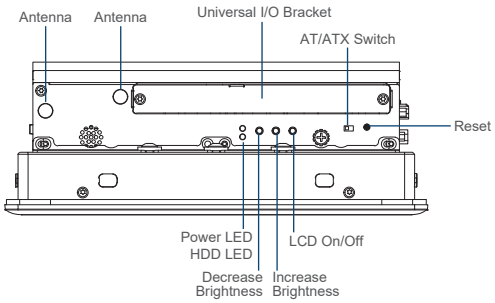

Right I/O

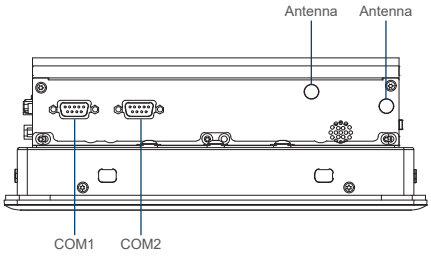

CV-W115FH/P2002E External Layout

Front I/O

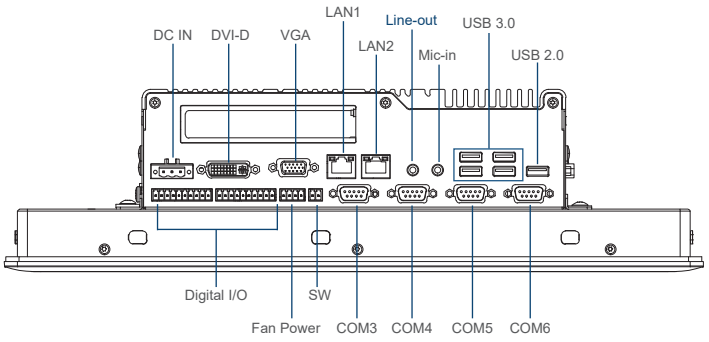

Rear I/O

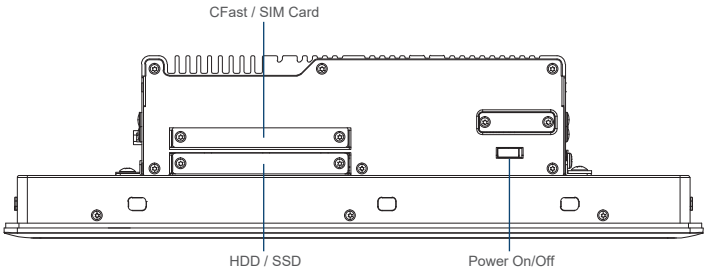

Left I/O

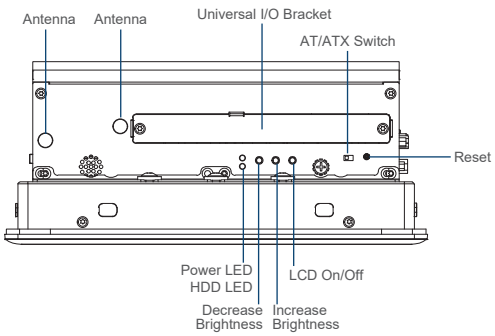

Right I/O

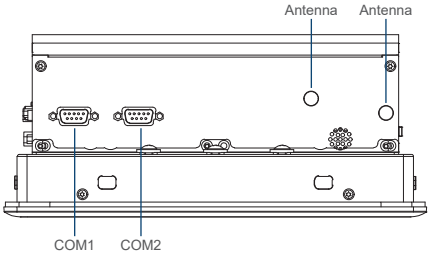

CV-W115FH/P2002 Dimensions

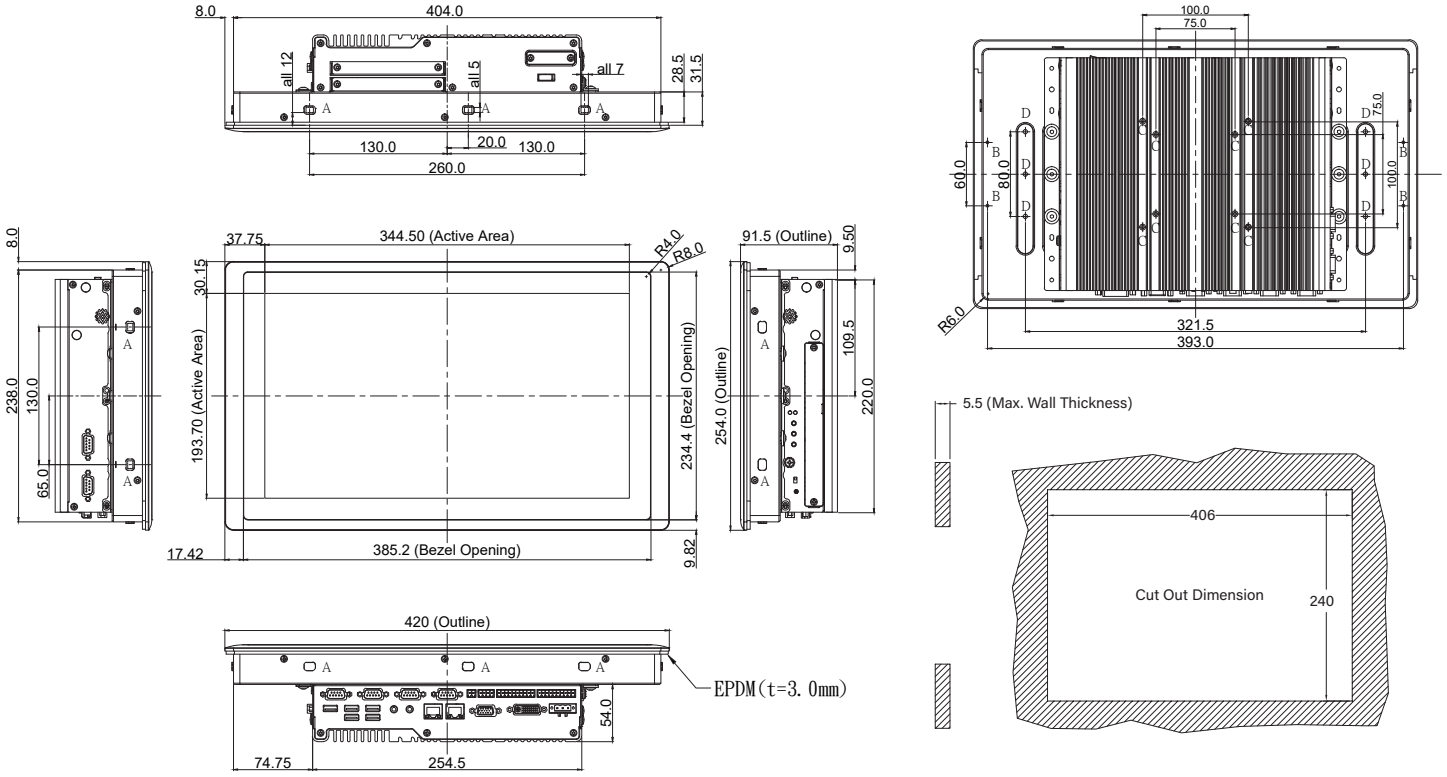

CV-W115FH/P2002E Dimensions

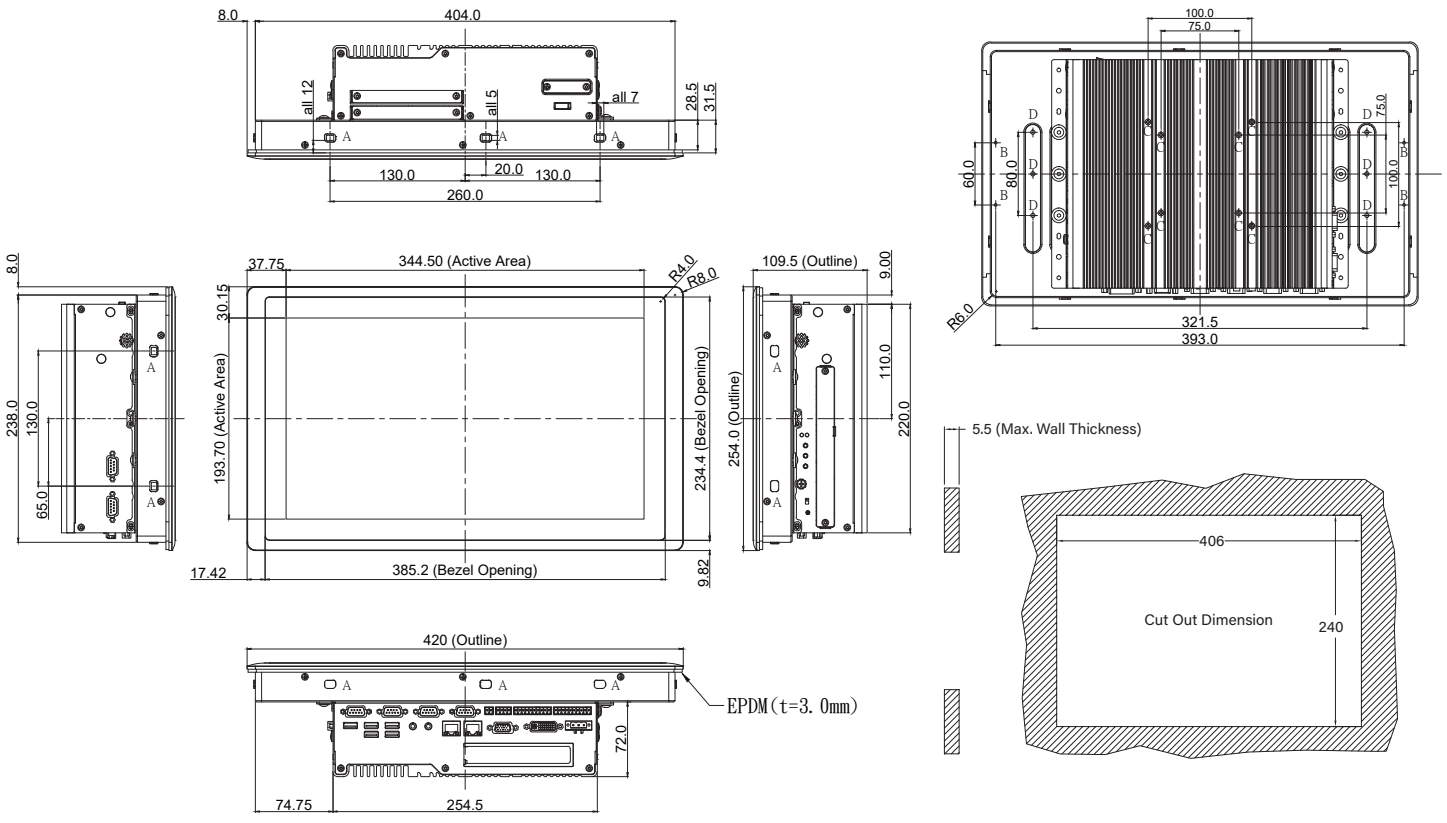

Unit: mm

Ordering Information

Available Models

Model No.	Description
CV-W115FHR-R10/ P2002-i5-R10	15.6" TFT-LCD Full HD 16:9 Panel PC with Resistive 5-wire Touch and Intel 6th Gen. Core i5-6300U Fanless Computer, CFM Interface, CDS Interface
CV-W115FHR-R10/ P2002E-i5-R10	15.6" TFT-LCD Full HD 16:9 Panel PC with Resistive 5-wire Touch and Intel 6th Gen. Core i5-6300U Expandable Fanless Computer, CFM Interface, CDS Interface
CV-W115FHR-R10/ P2002E-i5-E4-R10	15.6" TFT-LCD Full HD 16:9 Panel PC with Resistive 5-wire Touch and Intel 6th Gen. Core i5-6300U Expandable Fanless Computer, CFM Interface, CDS Interface, 1x PCIex4 Expansion
CV-W115FHR-R10/ P2002E-i5-PI-R10	15.6" TFT-LCD Full HD 16:9 Panel PC with Resistive 5-wire Touch and Intel 6th Gen. Core i5-6300U Expandable Fanless Computer, CFM Interface, 1x PCI Expansion
CV-W115FHC-R10/P2002-i5-R10	15.6" TFT-LCD Full HD 16:9 Panel PC with Projected Capacitive Touch and Intel 6th Gen. Core i5-6300U Fanless Computer, CFM Interface, CDS Interface
CV-W115FHC-R10/ P2002E-i5-R10	15.6" TFT-LCD Full HD 16:9 Panel PC with Projected Capacitive Touch and Intel 6th Gen. Core i5-6300U Expandable Fanless Computer, CFM Interface, CDS Interface
CV-W115FHC-R10/ P2002E-i5-E4-R10	15.6" TFT-LCD Full HD 16:9 Panel PC with Projected Capacitive Touch and Intel 6th Gen. Core i5-6300U Expandable Fanless Computer, CFM Interface, CDS Interface, 1x PCIex4 Expansion
CV-W115FHC-R10/ P2002E-i5-PI-R10	15.6" TFT-LCD Full HD 16:9 Panel PC with Projected Capacitive Touch and Intel 6th Gen. Core i5-6300U Expandable Fanless Computer, CFM Interface, CDS Interface, 1x PCI Expansion
CV-W115FHR-R10/P2002-i3-R10	15.6" TFT-LCD Full HD 16:9 Panel PC with Resistive 5-wire Touch and Intel 6th Gen. Core i3-6100U Fanless Computer, CFM Interface, CDS Interface
CV-W115FHR-R10/ P2002E-i3-R10	15.6" TFT-LCD Full HD 16:9 Panel PC with Resistive 5-wire Touch and Intel 6th Gen. Core i3-6100U Expandable Fanless Computer, CFM Interface, CDS Interface
CV-W115FHR-R10/P 2002E-i3-E4-R10	15.6" TFT-LCD Full HD 16:9 Panel PC with Resistive 5-wire Touch and Intel 6th Gen. Core i3-6100U Expandable Fanless Computer, CFM Interface, CDS Interface, 1x PCIex4 Expansion
CV-W115FHR-R10/ P2002E-i3-PI-R10	15.6" TFT-LCD Full HD 16:9 Panel PC with Resistive 5-wire Touch and Intel 6th Gen. Core i3-6100U Expandable Fanless Computer, CFM Interface, 1x PCI Expansion
CV-W115FHC-R10/P2002-i3-R10	15.6" TFT-LCD Full HD 16:9 Panel PC with Projected Capacitive Touch and Intel 6th Gen. Core i3-6100U Fanless Computer, CFM Interface, CDS Interface
CV-W115FHC-R10/ P2002E-i3-R10	15.6" TFT-LCD Full HD 16:9 Panel PC with Projected Capacitive Touch and Intel 6th Gen. Core i3-6100U Expandable Fanless Computer, CFM Interface, CDS Interface
CV-W115FHC-R10/ P2002E-i3-E4-R10	15.6" TFT-LCD Full HD 16:9 Panel PC with Projected Capacitive Touch and Intel 6th Gen. Core i3-6100U Expandable Fanless Computer, CFM Interface, CDS Interface, 1x PCIex4 Expansion
CV-W115FHC-R10/ P2002E-i3-PI-R10	15.6" TFT-LCD Full HD 16:9 Panel PC with Projected Capacitive Touch and Intel 6th Gen. Core i3-6100U Expandable Fanless Computer, CFM Interface, CDS Interface, 1x PCI Expansion

Model Configuration

	CV-W115FHR	CV-W115FHC	P2002(i3/i5)	P2002E(i3/i5/E4/PI)
CV-W115FHR/P2002	V	--	V	--
CV-W115FHC/P2002	--	V	V	--
CV-W115FHR/P2002E	V	--	--	V
CV-W115FHC/P2002E	--	V	--	V

V : Compatible

Package Checklist

- CV-W115FH/P2002 Series Panel PC x 1
- Power Terminal Block Connector (Female) x 1
- Panel Mounting Kit x 10
- Screw Pack x 1
- Fan Terminal Block Connector x 1
- Remote Power On/Off Terminal Block Connector x 1
- DIO Terminal Block Connector (Female) x 2

Optional Modules and Accessories

Model No.	Description
MEC-COM-M212-DB9	Mini-PCIe Module with 2x RS-232 Serial Ports, 1x Standard DB9 Cable
MEC-COM-M334-TDB9	Mini-PCIe Module with 4x RS-232/422/485 Serial Ports, 2x Thin DB9 Cable
MEC-LAN-M102-30	Mini-PCIe Module with 2x LAN Ports, 2x 30cm
MEC-USB-M102-30	Mini-PCIe Module with 2x USB 3.2 Gen1 Ports
CFM-IGN100	CFM Module with Power Ignition Sensing Control Function, 12V/24V Selectable (41 x 35 mm)
CFM-PoE100	PoE Control Function Module, Individual Port 25.5W (50 x 44 x 15 mm) (For P2002 only)
CFM-PoE101	PoE Control Function Module, Individual Port 25.5W (50 x 44 x 15 mm) (For P2002E only)
RC-E4-01	Riser Card with 1x PCIex4 Slot(For P2002E only)
RC-PI-01	Riser Card with 1x PCI Slot(For P2002E only)
UB0503	Universal Bracket with 2x DB9 Cutout
UB0504	Universal Bracket with 4x DB9 Cutout
UB0511	Universal Bracket with 2x RJ45 Cutout
UB0514	Universal Bracket with 2x USB Cutout
URM01	Universal 19" Rack Mount Kit for Industrial Panel PC & Industrial Monitor
GST220A24-CIN	Adapter AC/DC 24V 9.2A 220W with 3pin Terminal Block Plug 5.0mm Pitch, with TUBES, GST220A24-CIN
GST120A24-CIN	Adapter AC/DC 24V 5A 120W, GST120A24-CIN, wide temp(-30°C ~ +70°C), level VI
GST60A12-CIN1	Adapter AC/DC 12V 5A 60W, GST60A12-CIN1, wide temp(-30°C ~ +70°C)
SL2-SL3	US 2 heads power cord, US B type to IEC C13,SVT 18AWG/3C Black 1.8M
SL6-SL3	EU 2 heads power cord, EU G type to IEC C13,H05VV-F 0.75mm2/3G Black 1.8M
QP026-SL3	UK 2 heads power cord, UK I type to IEC C13,H05VV-F 0.75mm2/3G Black 1.8M

Optional Module Configuration

P2002

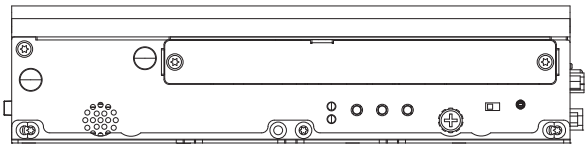

P2002E

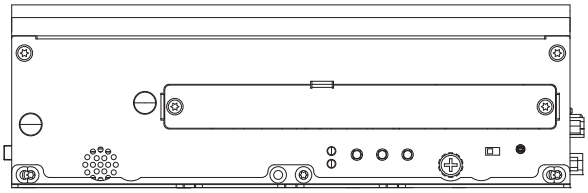

Model No.	Description	P2002	P2002E
MEC-COM-M212/UB0503 	Mini-PCIe Module with 2x COM Ports, 1x Universal Bracket with 2x DB9 Cutout (154 x 17 mm)	V	V
MEC-COM-M334/UB0504 	Mini-PCIe Module with 4x RS-232/422/485 Serial Ports, 1x Universal Bracket with 4x DB9 Cutout (154 x 17 mm)	V	V
MEC-LAN-M102-30/UB0511 	Mini-PCIe Module with 2x LAN Ports, 2x 30cm cable, 1x Universal Bracket with 2x RJ45 Cutout (154 x 17 mm)	V	V
MEC-USB-M102-30/UB0514 	Mini-PCIe Module with 2x USB 3.0 Ports, 1x Universal Bracket with 2x USB Cutout (154 x 17 mm)	V	V

V : Compatible

Updated: Aug. 29, 2025.

© Cincoze Co., Ltd. All Rights Reserved. Specifications subject to change without notice.
All product names, logos, and brands are the property of their respective owners. All company, product and service names used in this document are for identification purposes only. The use of these names, logos, and brands does not imply endorsement.